Exova Warringtonfire
Holmesfield Road
Warrington
WA1 2DS
United Kingdom

T : +44 (0) 1925 655 116
F : +44 (0) 1925 655 419
E : warrington@exova.com
W: www.exova.com

Testing. Advising. Assuring.

Title:

The Fire Resistance Performance of a Specimen of a Loadbearing Timber Floor Assembly Protected by a Plasterboard Ceiling Designed to Provide 60 minutes Fire Resistance, Incorporating Twenty Downlight Light Fittings, Tested in Accordance with BS 476: Part 21: 1987, Clause 7

WF Report No:

371969B

Prepared for:

Integral LED
Unit 6, Iron Bridge Close, Iron Bridge Business Park, London, NW10 0UF, UK

Date:

19th May 2017

Notified Body No:

0833

UKAS TESTING
0249

This test report is additional to that issued as WF Test report No. 371969 and dated 14th March 2017. The original test report remains valid and is not replaced by this additional test report.

Summary

Objective

To determine the fire resistance performance of a loadbearing timber floor assembly protected by a plasterboard ceiling designed to provide 60 minutes fire resistance, incorporating twenty downlight light fittings, when tested in accordance with Clause 7 of BS 476: Part 21: 1987.

Sponsor

Integral LED
Unit 6, Iron Bridge Close, Iron Bridge Business Park, London, NW10 0UF,
UK

Summary of Tested Assembly

The timber floor had overall nominal dimensions of 4500 mm long by 3000 mm wide and comprised softwood timber joists at 600 mm centres. The upper surface of the floor comprised nominally 22 mm thick tongue and grooved chipboard flooring.

The floor assembly was protected on its underside by a direct fixed ceiling, formed from two layers of 12.5 mm thick British Gypsum Fireline plasterboard, both layers were screw fixed to the underside of the floor joists.

The floor supported an evenly distributed load of 0.746 kN/m^2.

The ceiling incorporated twenty downlight light fittings.

Eleven of which were referenced J, K, L, M, N, O, P, Q, R, S, T and are subjected to a separate test report referenced 371969A.

Nine of which were provided by the test sponsor and were referenced as follows:

Test Ref.	Model Ref.	Description
A	ILDLFR60FXXX	Round, fixed, Agate LED recessed downlight, 60 mm diameter cut-out.
B	ILDLFR70EXXX	Round, fixed, Agate LED recessed downlight, 70 mm diameter cut-out.
C	ILDLFR70DXXX	Round, fixed, Agate LED recessed downlight, 70 mm diameter cut-out.
D	ILDLFR70DXXX	Round, fixed, Agate LED recessed downlight, 70 mm diameter cut-out.
E	ILDLFR70DXXX	Round, fixed, Agate LED recessed downlight with accessory of slim fire, 100 mm diameter cut-out.
F	ILDLFR70DXXX	Square, fixed, LED recessed downlight, 70 mm diameter cut-out
G	ILDLFR70DXXX	Square, fixed, LED recessed downlight, 70 mm diameter cut-out
H	ILDLFR70EXXX	Square, fixed, LED recessed downlight, 70 mm x 70 mm cut-out
I	ILDLFR70FXXX	Square, fixed, LED recessed downlight, 70 mm x 70 mm cut-out

Test Results:

Loadbearing Capacity	66 minutes*
Integrity	66 minutes*
Insulation	66 minutes*

*The test was discontinued after a period of 66 minutes

Date of Test 23rd October 2016

This report may only be reproduced in full. Extracts or abridgements of reports shall not be published without permission of Exova Warringtonfire.

Signatories

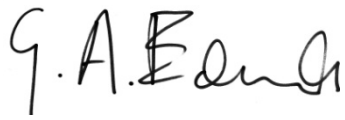

Responsible Officer
G. Edmonds*
Senior Technical Officer

Approved
W. Drazkiewicz*
Technical Officer

* For and on behalf of **Exova Warringtonfire.**

Report Issued

19th May 2017

This test report is additional to that issued as WF Test report No. 371969 and dated 14th March 2017. The original test report remains valid and is not replaced by this additional test report.

This copy has been produced from a .pdf format electronic file that has been provided by **Exova Warringtonfire** to the sponsors of the report and must only be reproduced in full. Extracts or abridgements of reports must not be published without permission of **Exova Warringtonfire**. The pdf copy supplied is the sole authentic version of this document. All pdf versions of this report bear authentic signatures of the responsible **Exova Warringtonfire** staff.

CONTENTS **PAGE NO.**

SUMMARY **2**
SIGNATORIES **4**
TEST PROCEDURE **6**
TEST SPECIMENS **7**
SCHEDULE OF COMPONENTS **19**
INSTRUMENTATION **21**
TEST PHOTOGRAPHS **23**
TEMPERATURE & DEFLECTION DATA **26**
LOAD CALCULATIONS **36**
PERFORMANCE CRITERIA AND TEST RESULTS **38**
ONGOING IMPLICATIONS **38**
CONCLUSIONS **39**

Test Procedure

Introduction

The specimen tested was of a loadbearing construction. The test was conducted in accordance with Clause 7 of BS 476: Part 21: 1987, 'Methods for determination of the fire resistance of loadbearing elements of construction'. This test report should be read in conjunction with that Standard and with BS 476: Part 20: 1987, 'Method for determination of the fire resistance of elements of construction (general principles)'.

The purpose of the test was to evaluate the performance of a timber floor construction protected by a ceiling of previously proven fire resistance, when incorporating down lighter fitting assemblies.

The specimen was judged on its ability to comply with the performance criteria for loadbearing capacity, integrity and insulation, as required by BS 476: Part 21: 1987, Clause 7.

Fire Test Study Group/EGOLF

Certain aspects of some fire test specifications are open to different interpretations. The Fire Test Study Group and EGOLF have identified a number of such areas and have agreed Resolutions which define common agreement of interpretations between fire test laboratories which are members of the Groups. Where such Resolutions are applicable to this test they have been followed.

Instruction To Test

The test was conducted on the 24th October 2016 at the request of the test sponsor.

Mr. A. Gooding a representative of the test sponsor witnessed the test.

Test Assembly Construction

A comprehensive description of the test construction is given in the Schedule of Components. The description is based on a detailed survey of the specimens and information supplied by the sponsors of the test.

Installation

Representatives of Exova Warringtonfire assembled the floor construction and installed the down lighters on the 17th October 2016.

Conditioning

The specimens' storage, construction, and test preparation took place in the test laboratory over a total combined time of 8 days. Throughout this period of time both the temperature and the humidity of the laboratory were measured and recorded as being within a range of from 8°C to 16°C and 47% to 65% respectively.

Test Specimens

Figure 1- General Elevation of Test Specimens

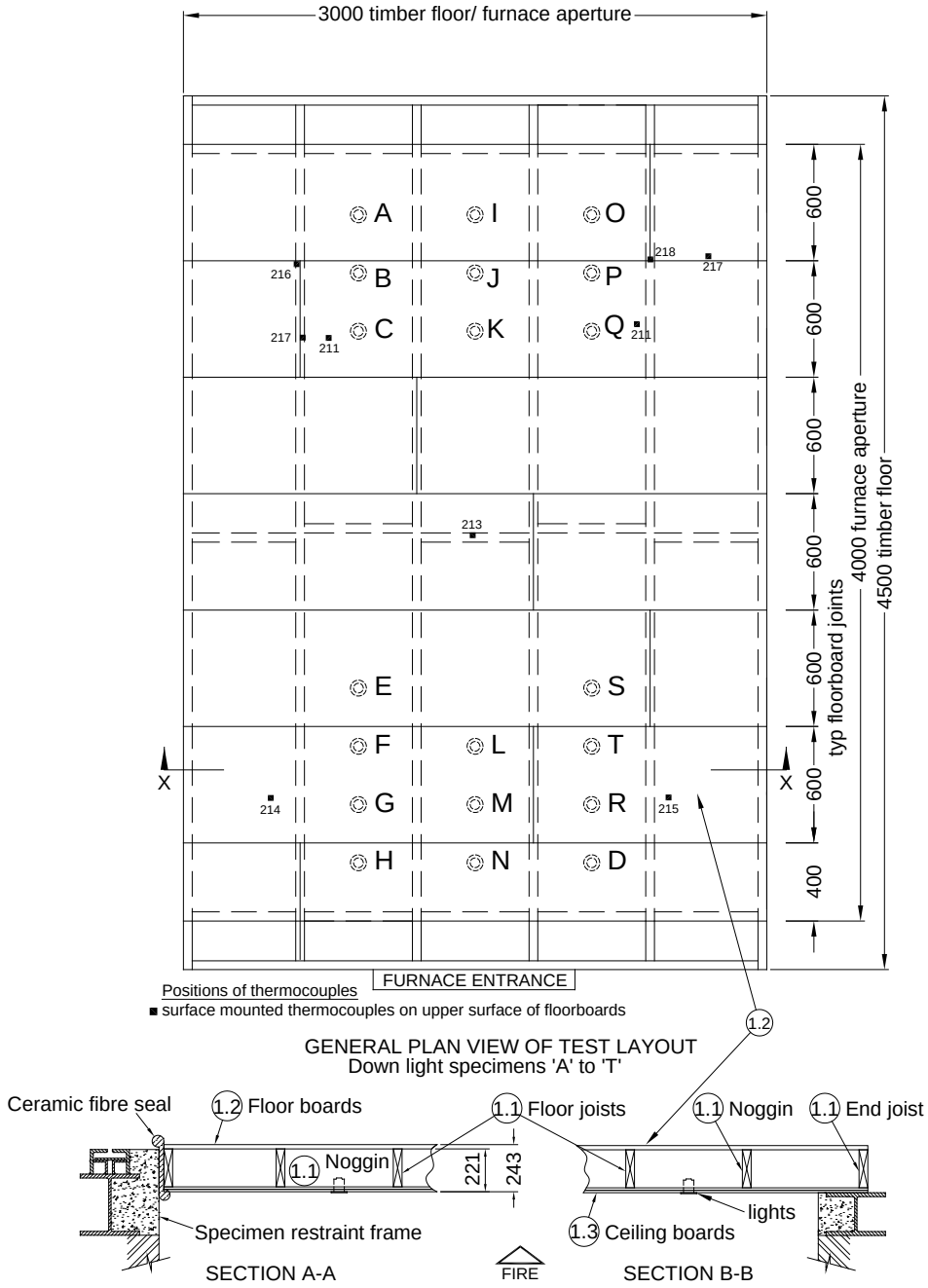

Do not scale. All dimensions are in mm

Figure 2 – Details of Downlighter Positions

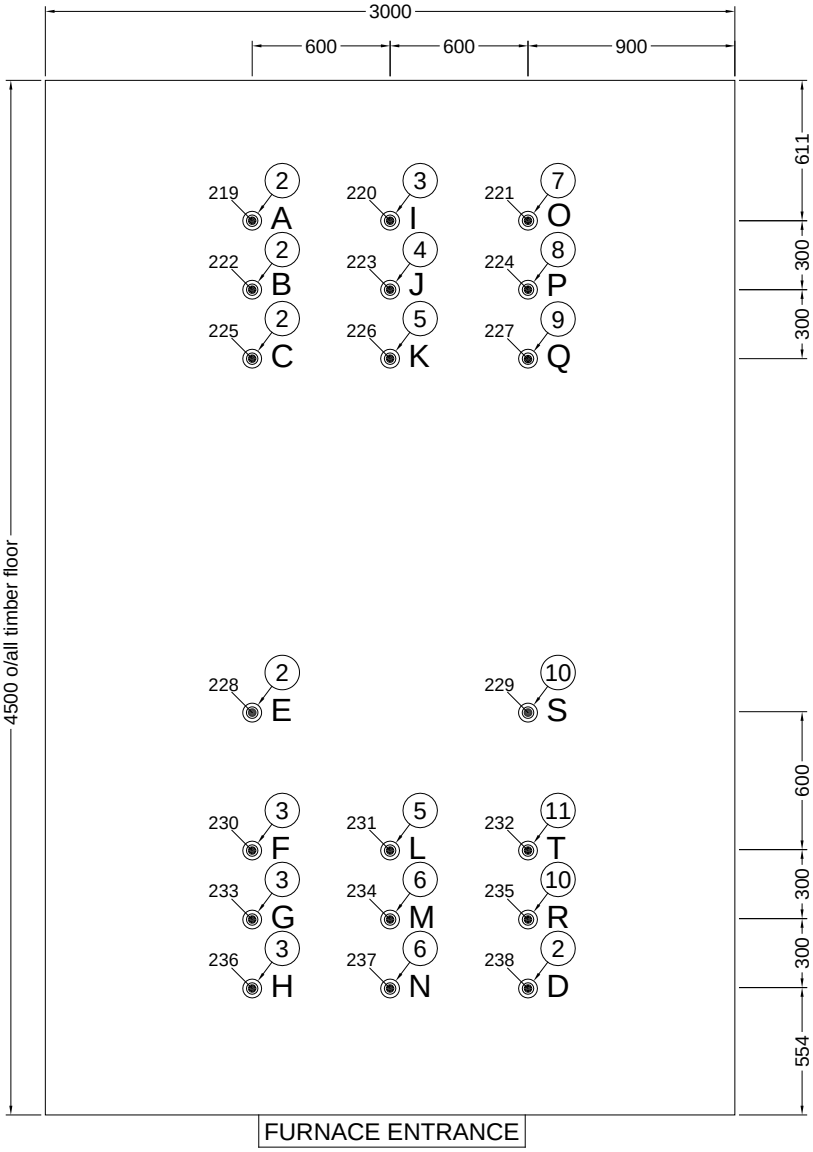

DOWNLIGHTER LAYOUT
PLAN OF THERMOCOUPLE POSITIONS

● Mineral insulated thermocouples at mid-cavity height

Do not scale. All dimensions are in mm

Figure 3 – Details of Downlighter Specimen A

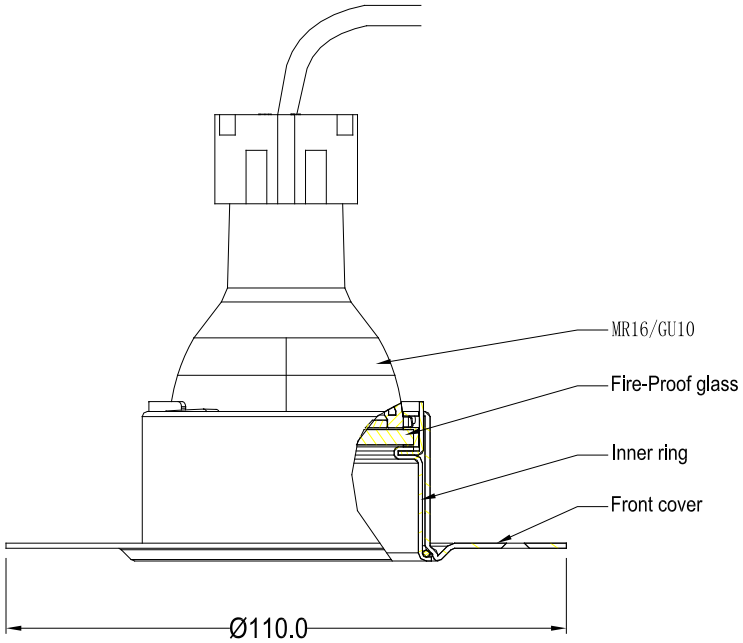

Fixed
ILDLFR60FXXX
Cut out:ϕ60

Do not scale. All dimensions are in mm

Figure 4 – Details of Downlighter Specimen B

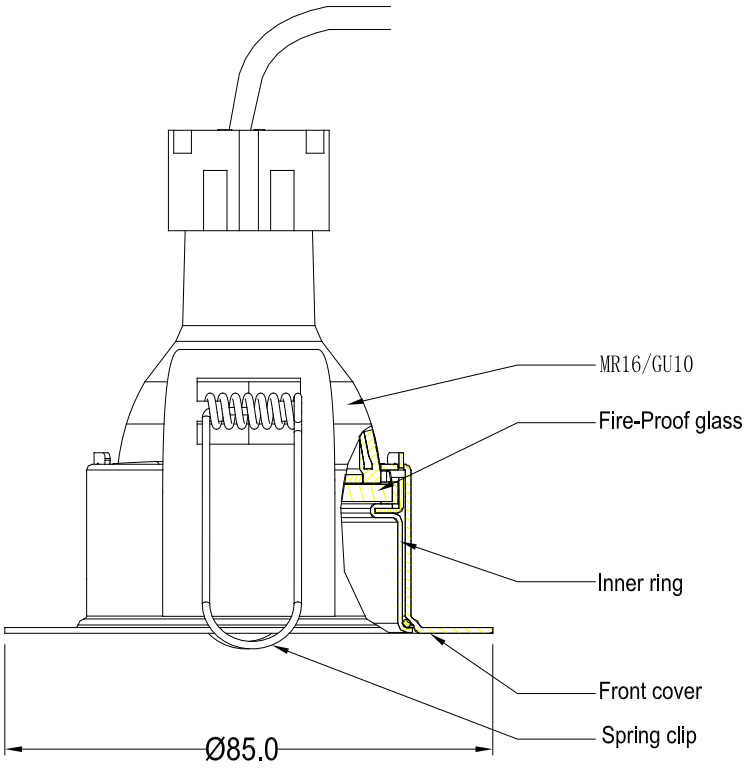

Fixed
ILDLFR70EXXX
Cut out:ϕ70

Do not scale. All dimensions are in mm

Figure 5 – Details of Downlighter Specimen C

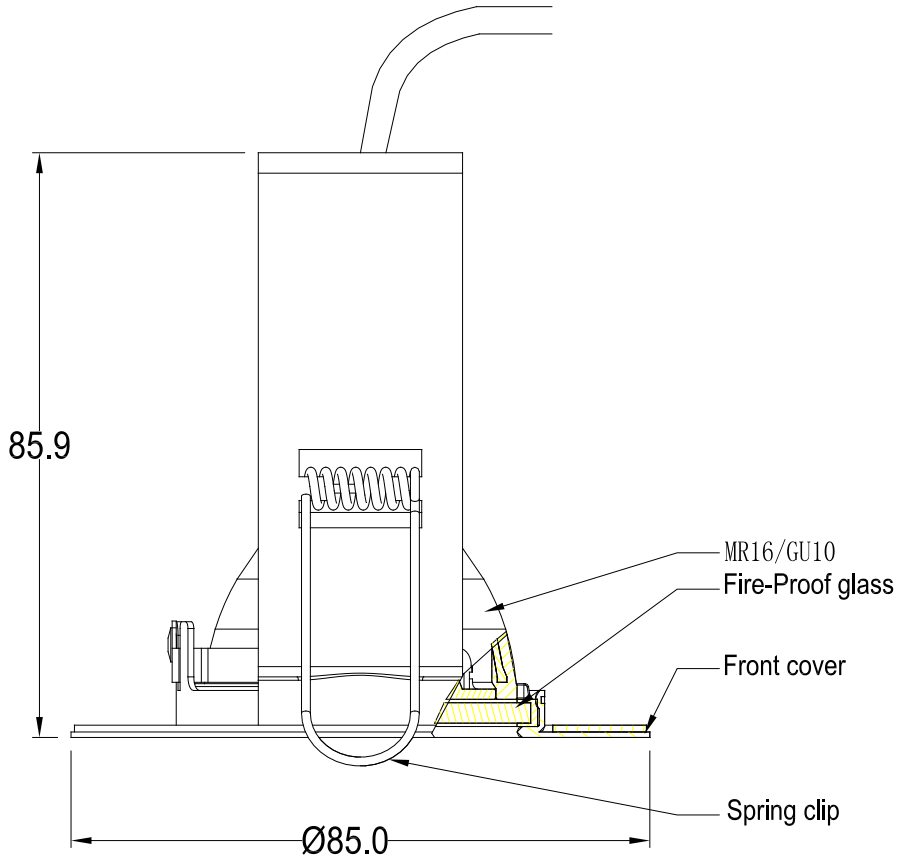

Fixed
ILDLFR70DXXX
with bracket
Cut out:ϕ70

Do not scale. All dimensions are in mm

Figure 6 – Details of Downlighter Specimen D

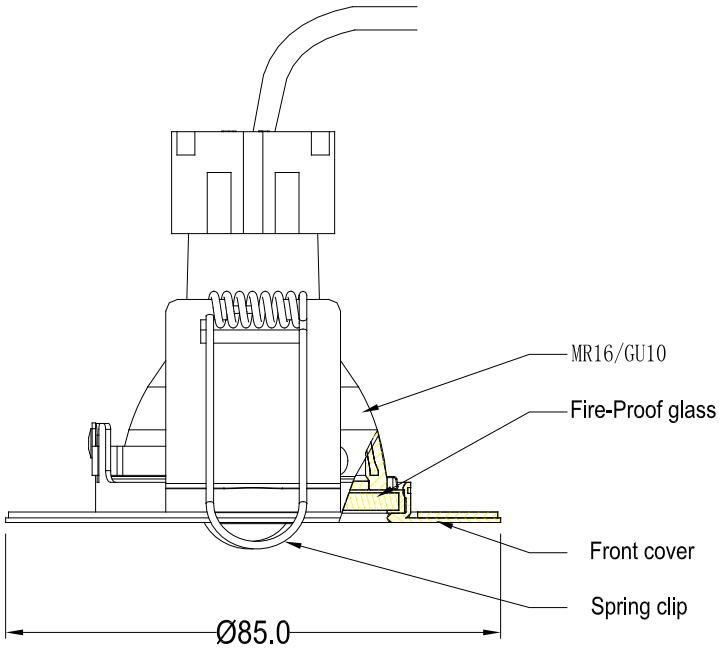

Fixed
ILDLFR70DXXX
Cut out:Φ70

Do not scale. All dimensions are in mm

Figure 7 – Details of Downlighter Specimen E

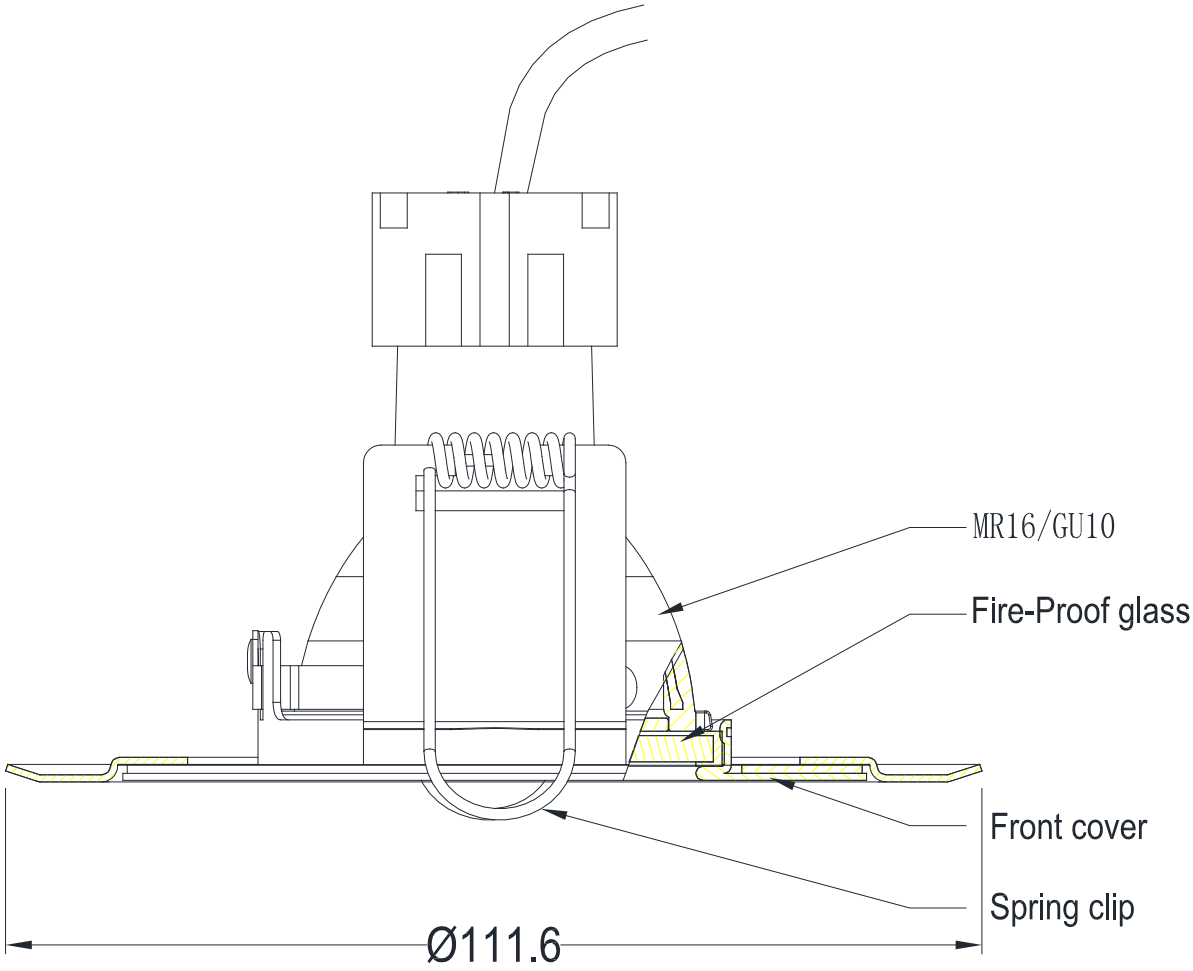

Fixed
ILDLFR70DXXX
accessory of Slim Fire
Cut out:Ø100mm

Do not scale. All dimensions are in mm

Figure 8 – Details of Downlighter Specimen F

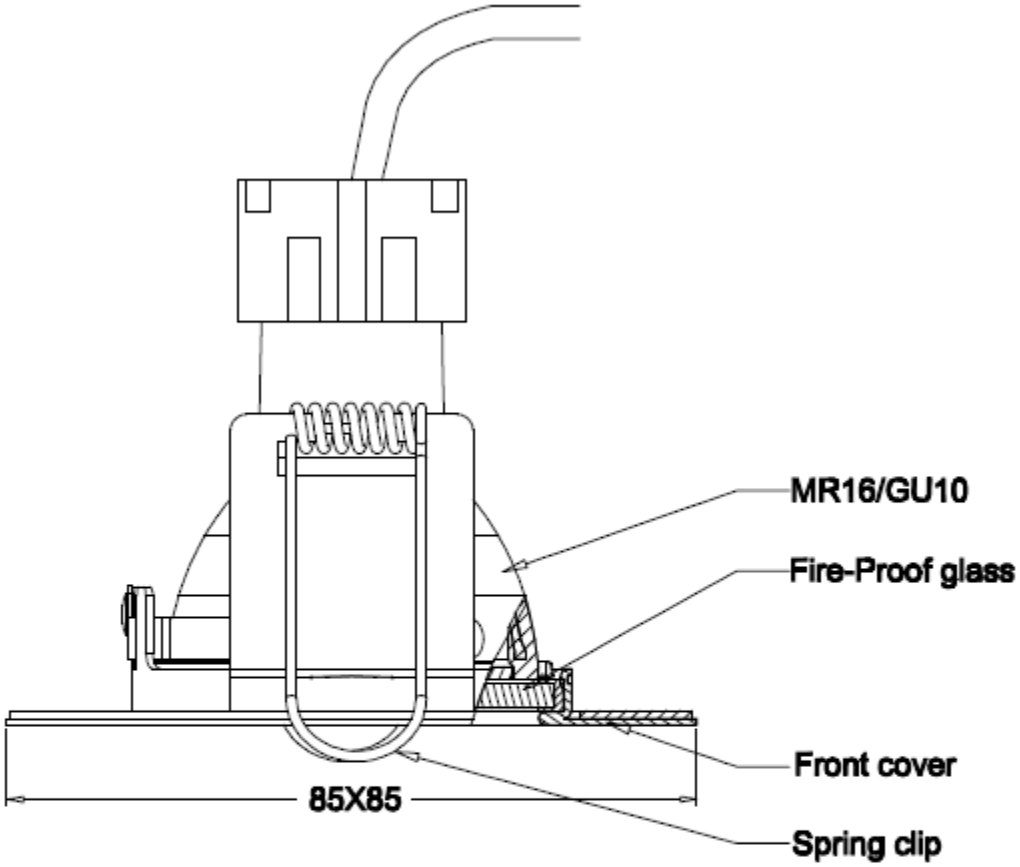

Do not scale. All dimensions are in mm

Figure 9 – Details of Downlighter Specimen G

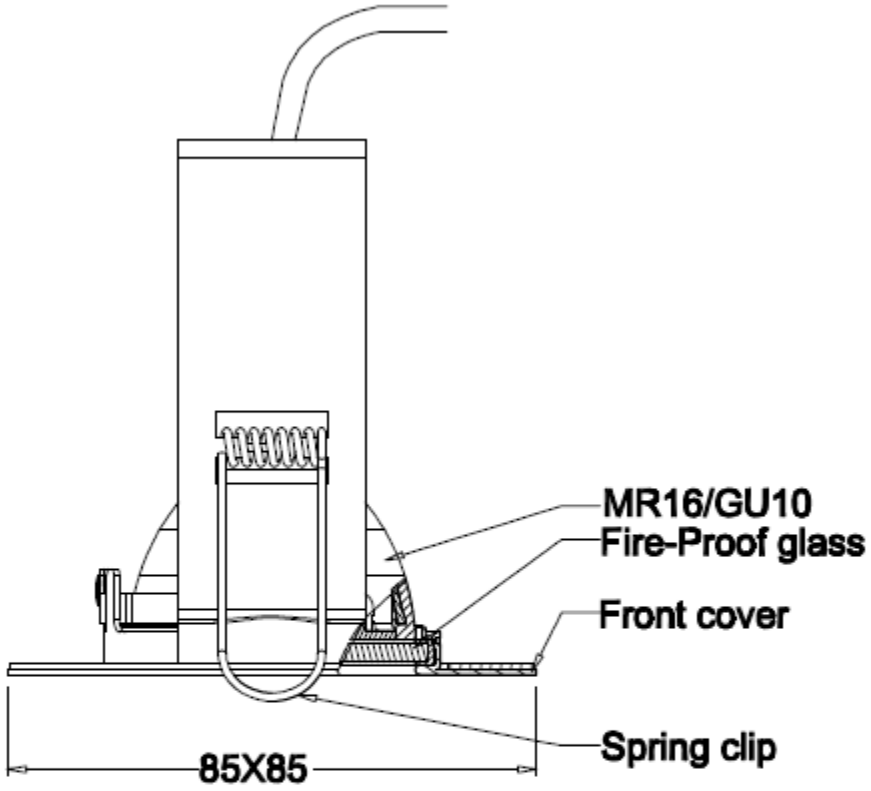

Fixed model
ILDLFR70DXXX
Slim fire square bezel with bracket
Cut out:Ø70mm

Do not scale. All dimensions are in mm

Figure 10 – Details of Downlighter Specimen H

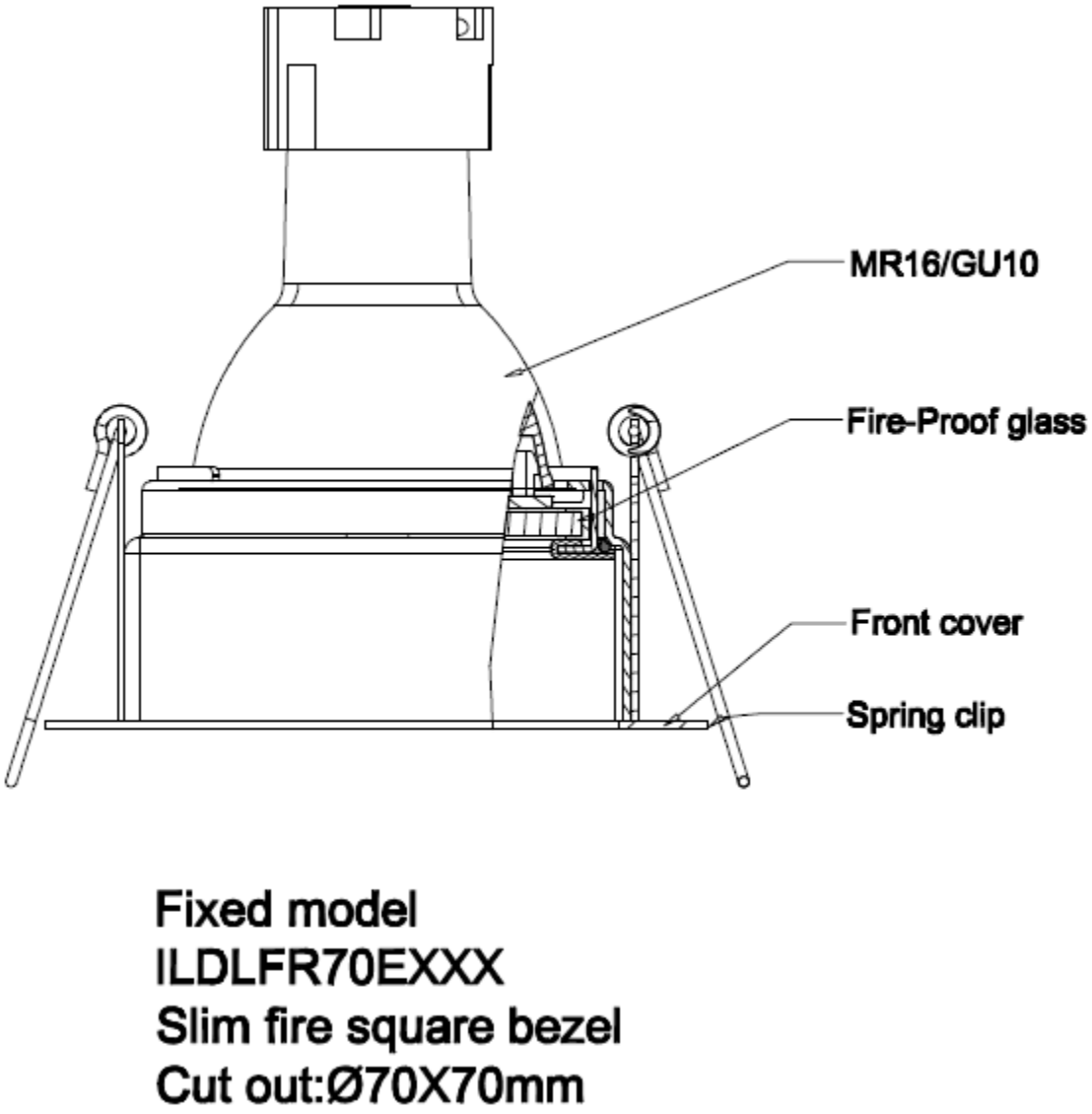

Do not scale. All dimensions are in mm

Figure 11 – Details of Downlighter Specimen I

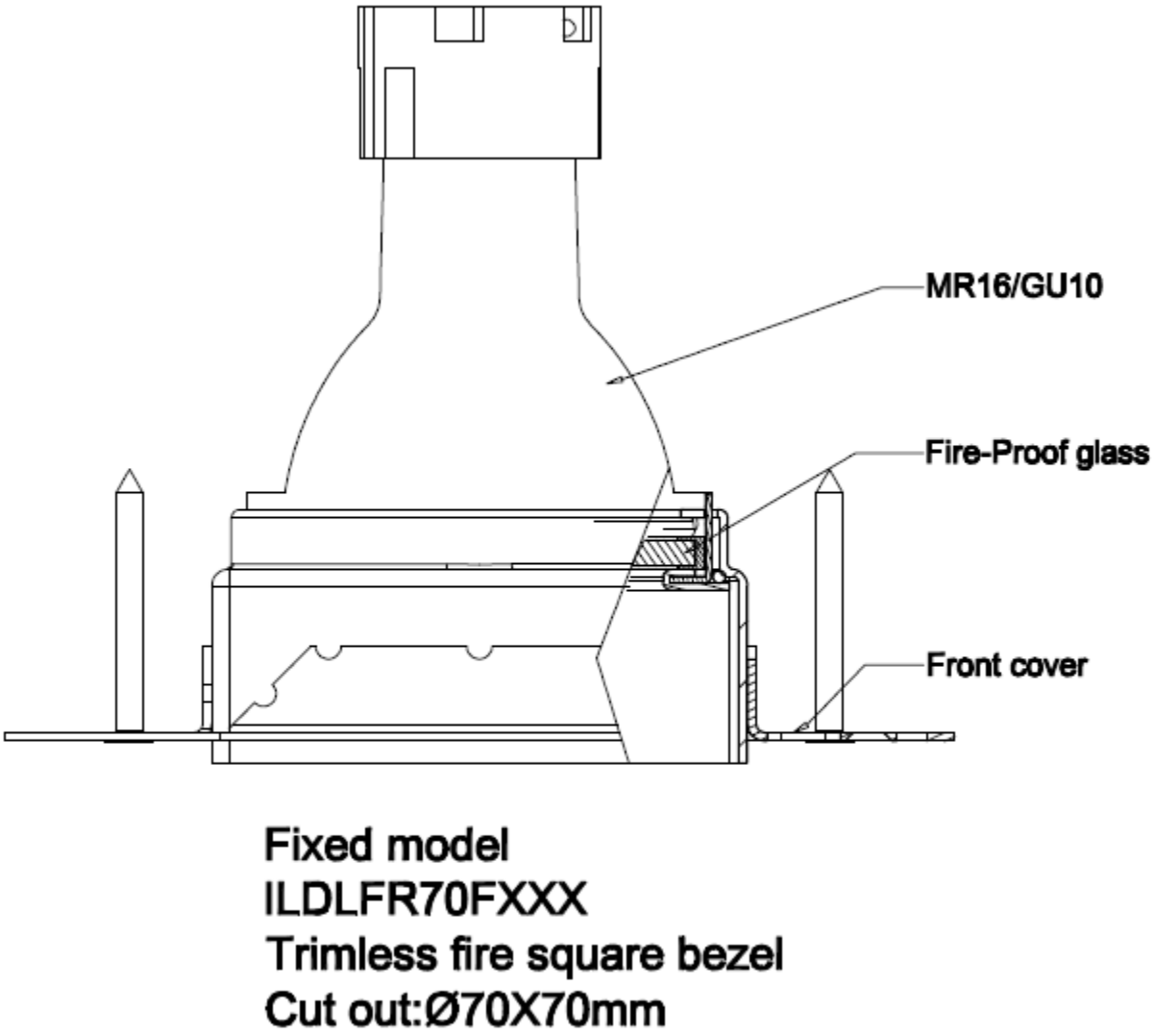

Do not scale. All dimensions are in mm

Figure 12 – Details of Downlighter Specimens J to T

ITEMS REPORTED SEPARATELY IN THE TEST REPORT REFERENCED 371969B

Do not scale. All dimensions are in mm

Schedule of Components

(Refer to Figures 1 to 22)
(All values are nominal unless stated otherwise)
(All other details are as stated by the sponsors)

Item		Description
1. Timber Floor		
1.1 Floor Joists		
Material	:	British Home-grown, rough sawn softwood, kiln dried
Grade	:	C16, to BS EN 519
Density	:	438 kg/m^3
Size	:	45 mm x 196 mm
Joist centres	:	600 mm
1.2 Floor Boards		
Material	:	Flooring grade tongue and groove chipboards
Reference	:	FSC E1 P5
Thickness	:	22 mm
Size	:	600 mm wide
Fixing	:	Fixed in a single layer with 6 mm diameter x 60 mm long countersunk steel screws to floor joists at 300 mm centres
1.3 Ceiling Boards		
Manufacturer	:	British Gypsum
Type / reference	:	Gyproc Fireline Wallboard
Density	:	761 kg/m^3
Thickness	:	2 off layers 12.5 mm thick
Fixing		
i. method	:	The boards were screw fixed to the soffit of the joists with all joints staggered
ii. fixings	:	Drywall self drill and tapping screws 38 mm
iii. frequency	:	150 mm centres along joints and 150 mm to the perimeter of the ceiling
2. Specimens A, B, C, D, E		
Manufacturer	:	Integral LED
Type	:	Round, fixed, Agate LED recessed downlight
Reference	:	See Figures 3 to 7.
Materials		
i. front cover	:	Steel
ii. inner ring	:	Steel
iii. spring	:	Stainless steel
iv. diffuser	:	Pyrex glass
Overall dimensions and construction	:	See Figures 3 to 7.
Cut out size	:	Varies see relevant figure.
Driver	:	None
Lamp	:	GU10/MR16

Item		Description
3. Specimen F, G, H, I		
Manufacturer	:	Integral LED
Type	:	Square, fixed, LED recessed downlight
Reference	:	See Figures 8 to 11.
Materials		
i. front cover	:	Steel
ii. spring	:	Stainless steel
iii. diffuser	:	Pyrex glass
Overall dimensions and construction	:	Please see Figures 8 to 11
Cut out size	:	Various see relevant figures
Driver	:	None
Lamp	:	GU10/MR16
4. Specimen J	:	Specimen reported separately
5. Specimen K, L	:	Specimens reported separately
6. Specimen M, N	:	Specimens reported separately
7. Specimens O	:	Specimen reported separately
8. Specimens P	:	Specimen reported separately
9. Specimen Q	:	Specimen reported separately
10. Specimens R, S	:	Specimens reported separately
11. Specimen T	:	Specimen reported separately

Instrumentation

General

The instrumentation was provided in accordance with the requirements of the Standard.

Furnace

The furnace was controlled so that its mean temperature complied with the requirements of BS 476: Part 20: 1987, Clause 3.1. using eight mineral insulated thermocouples distributed over a plane 100 mm from the underside of the ceiling.

Thermocouple Allocation

Thermocouples were provided to monitor the unexposed surface of the floor assembly and the output of all instrumentation was recorded at no less than one minute intervals as follows:

The locations and reference numbers of the various unexposed surface and internal thermocouples are shown in Figure 1.

Roving Thermocouple

A roving thermocouple was available to measure temperatures on the unexposed surface of the specimen at any position which might appear to be hotter than the temperatures indicated by the fixed thermocouples.

Integrity criteria

Cotton pads and gap gauges were available to evaluate the impermeability of the test construction to hot gases.

Furnace Pressure

After the first five minutes of testing and for the remainder of the test, the furnace atmospheric pressure was controlled so that it complied with the requirements of BS 476: Part 20: 1987, Clause 3.2.2. The calculated pressure differential relative to the laboratory atmosphere at a position 100 mm below the underside of the assembly was 20 (+0, -2) Pa.

Test Observations

Time		All observations are from the unexposed face unless noted otherwise.
mins	secs	The ambient air temperature in the vicinity of the test construction was 12ºC at the start of the test with a maximum variation of -1ºC during the test.
00	00	**The test commences.**
05	00	Paper face of the ceiling ignites.
10	00	No visible significant change to the unexposed surface of the specimen.
15	00	Slight amount of smoke/steam is being released from the ends of the floor.
20	00	The light fittings appear to be remaining in place in the ceiling.
25	00	The ceiling is radiating a dull orange colour on the exposed face.
30	00	The test specimen is maintaining its loadbearing capacity, integrity, and insulation.
40	00	The ceiling is radiating an orange colour on the exposed face.
42	00	Smoke/steam is being released from the ends of the specimen.
45	00	Small section of the ceiling is falling away on the exposed face.
48	00	No visible significant changes to the unexposed surface of the specimen.
55	00	The gaps between the joints in the ceiling are widening on the exposed face.
60	00	The test specimen is maintaining its loadbearing capacity, integrity, and insulation.
66	00	The test specimen is maintaining its loadbearing capacity, integrity, and insulation.
		The test is discontinued.

Test Photographs

The exposed face of the assembly prior to testing

The unexposed face of the assembly after 10 minutes of testing

The unexposed face of the assembly after 20 minutes of testing

The unexposed face of the assembly after 40 minutes of testing

The exposed ceiling assembly after a test duration of approximately 40 minutes

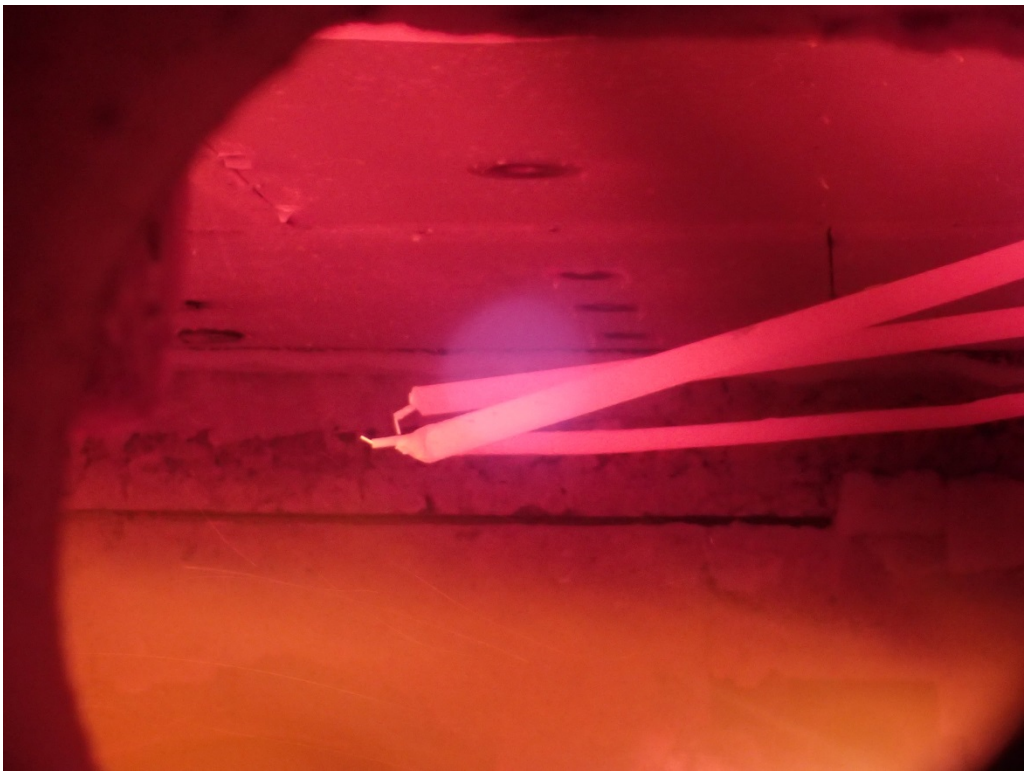

The unexposed face of the assembly after 60 minutes of testing

Temperature & Deflection Data

Mean furnace temperature, together with the temperature/time relationship specified in the Standard

Time Mins	Specified Furnace Temperature Deg. C	Actual Furnace Temperature Deg. C
0	20	35
2	445	474
4	544	526
6	603	600
8	646	638
10	678	674
12	706	694
14	728	718
16	748	742
18	766	778
20	781	792
22	796	795
24	809	807
26	820	806
28	832	833
30	842	845
32	852	850
34	860	862
36	869	865
38	877	875
40	885	886
42	892	897
44	899	903
46	906	913
48	912	916
50	918	920
52	924	924
54	930	935
56	935	939
58	940	942
60	945	944
62	950	949
64	955	955
66	960	964

Individual and mean temperatures recorded on the unexposed surface of the floor assembly

Time Mins	T/C Number 211 Deg. C	T/C Number 212 Deg. C	T/C Number 213 Deg. C	T/C Number 214 Deg. C	T/C Number 215 Deg. C	Mean Temp Deg. C
0	21	21	21	20	19	20
2	21	21	21	20	18	20
4	21	21	21	20	18	20
6	21	21	21	20	18	20
8	21	21	21	20	18	20
10	21	21	21	20	18	20
12	21	21	21	20	19	20
14	22	22	21	21	19	21
16	23	23	21	22	20	22
18	24	25	22	23	21	23
20	26	26	23	25	23	25
22	27	28	24	27	24	26
24	29	30	25	29	26	28
26	31	32	26	31	28	30
28	33	34	28	34	30	32
30	34	36	29	35	31	33
32	36	38	30	38	33	35
34	37	40	31	40	35	37
36	39	41	33	41	36	38
38	40	43	34	43	37	39
40	42	45	35	44	39	41
42	44	46	36	46	40	42
44	45	47	37	47	41	43
46	46	49	39	48	42	45
48	48	50	39	49	43	46
50	49	52	41	50	43	47
52	51	53	41	51	44	48
54	52	55	42	51	45	49
56	54	59	43	52	46	51
58	57	63	44	53	47	53
60	61	67	44	54	47	55
62	65	72	45	56	48	57
64	70	74	46	58	50	60
66	73	77	47	61	51	62

Individual temperatures recorded adjacent to joints in the flooring

Time Mins	T/C Number 216 Deg. C	T/C Number 217 Deg. C	T/C Number 218 Deg. C
0	20	20	20
2	20	20	20
4	20	20	20
6	20	20	20
8	19	20	20
10	19	20	20
12	19	20	20
14	20	21	21
16	20	21	22
18	20	22	23
20	21	23	25
22	21	25	27
24	22	26	29
26	23	29	31
28	24	31	34
30	25	34	37
32	26	36	39
34	28	39	41
36	29	41	44
38	30	43	46
40	32	45	48
42	33	46	50
44	34	48	51
46	36	49	52
48	37	50	54
50	39	51	55
52	40	52	55
54	42	53	56
56	43	55	59
58	45	57	61
60	47	60	64
62	50	64	67
64	55	69	69
66	59	76	72

Individual temperatures recorded adjacent to the light fittings at mid height of the cavity

Time Mins	T/C Number 219 Deg. C	T/C Number 220 Deg. C	T/C Number 221 Deg. C	T/C Number 222 Deg. C	T/C Number 223 Deg. C	T/C Number 224 Deg. C	T/C Number 225 Deg. C
0	20	21	21	23	23	23	23
2	20	21	21	23	23	23	23
4	22	24	25	24	26	25	29
6	31	38	38	35	41	45	36
8	45	52	52	51	53	64	48
10	59	71	65	65	64	82	56
12	71	83	76	72	73	85	65
14	75	93	83	89	76	90	72
16	79	98	94	97	80	113	76
18	83	109	104	82	81	132	80
20	85	108	111	103	85	121	81
22	87	103	111	98	89	139	86
24	93	107	107	103	95	171	91
26	98	113	105	110	101	163	92
28	101	152	107	120	100	143	95
30	103	147	113	122	100	155	98
32	105	139	114	144	100	149	99
34	105	134	132	143	103	151	102
36	105	123	130	146	105	153	102
38	106	116	120	133	106	141	102
40	107	113	118	124	106	159	103
42	108	114	118	120	107	158	104
44	110	116	121	126	109	151	105
46	113	121	125	125	114	153	109
48	119	131	136	123	123	160	115
50	130	148	152	131	138	175	127
52	148	164	169	148	154	179	143
54	166	177	183	163	167	185	159
56	180	190	197	178	180	195	173
58	194	200	210	190	190	205	185
60	205	210	220	200	199	216	199
62	215	222	231	211	207	225	208
64	227	229	242	218	216	236	218
66	235	238	250	227	224	245	228

Individual temperatures recorded adjacent to the light fittings at mid height of the cavity

Time Mins	T/C Number 226 Deg. C	T/C Number 227 Deg. C	T/C Number 228 Deg. C	T/C Number 229 Deg. C	T/C Number 230 Deg. C	T/C Number 231 Deg. C	T/C Number 232 Deg. C
0	24	23	22	19	25	19	19
2	24	23	23	19	24	19	19
4	27	26	34	21	21	21	21
6	48	40	49	39	*	37	30
8	55	51	58	50		59	42
10	63	63	72	57		71	52
12	70	81	75	66		73	64
14	75	83	83	74		76	75
16	79	84	83	81		85	83
18	82	88	93	121		88	90
20	82	96	88	127		90	96
22	86	104	103	99		91	103
24	89	112	107	112		94	101
26	91	116	130	102		97	107
28	93	122	134	105		101	111
30	94	120	140	108		103	124
32	95	122	123	106	133	106	119
34	97	118	137	107	130	106	122
36	98	122	127	107	139	106	125
38	99	145	125	110	142	107	130
40	100	132	160	112	146	111	133
42	102	116	160	115	138	115	134
44	105	118	131	123	134	114	132
46	110	120	118	127	132	114	133
48	119	125	127	132	129	117	135
50	134	137	135	140	137	127	144
52	152	158	145	153	149	139	149
54	168	172	158	168	162	156	158
56	177	185	169	192	183	173	174
58	190	197	179	201	202	188	188
60	199	206	189	210	214	201	201
62	209	217	199	224	226	212	208
64	218	224	209	231	238	224	218
66	226	234	216	241	251	236	229

*Thermocouple Malfunction

Individual temperatures recorded adjacent to the light fittings at mid height of the cavity

Time Mins	T/C Number 233 Deg. C	T/C Number 234 Deg. C	T/C Number 235 Deg. C	T/C Number 236 Deg. C	T/C Number 237 Deg. C	T/C Number 238 Deg. C
0	20	20	20	22	23	38
2	21	20	20	23	23	38
4	24	22	21	25	25	39
6	37	35	30	41	36	37
8	49	47	41	65	46	39
10	62	69	52	91	59	44
12	76	107	63	103	69	56
14	87	124	73	115	77	65
16	92	124	84	127	83	76
18	96	116	95	100	87	83
20	106	116	107	110	96	88
22	123	113	123	134	106	90
24	118	114	126	123	105	93
26	127	145	127	116	102	95
28	143	144	139	119	107	98
30	1400	138	147	124	110	103
32	148	123	152	144	114	109
34	153	112	154	158	113	112
36	146	111	160	165	112	114
38	150	112	130	147	112	119
40	155	115	140	127	113	115
42	154	120	132	122	113	116
44	153	122	135	123	114	114
46	153	130	137	125	116	114
48	154	129	139	125	118	116
50	150	133	140	129	122	118
52	154	139	142	135	127	124
54	165	149	152	145	136	132
56	181	165	166	157	149	145
58	196	182	181	172	163	159
60	210	198	195	184	177	174
62	223	210	208	196	188	183
64	235	222	218	206	198	195
66	244	234	228	217	208	204

Deflection and rate of deflection of the floor assembly during the test

Time Mins	Central Vertical Deflection mm	Rate of Deflection mm/min
0	0	0
2	5	1
4	6	0
6	6	0
8	6	0
10	7	1
12	7	0
14	7	0
16	6	0
18	7	0
20	8	1
22	8	1
24	8	0
26	9	0
28	8	-1
30	10	0
32	11	1
34	11	0
36	12	1
38	12	0
40	13	1
42	13	0
44	14	1
46	14	0
48	14	0
50	15	1
52	15	0
54	15	0
56	16	0
58	17	0
60	18	1
62	19	0
64	21	1
66	23	2

Graph showing specified and actual furnace temperatures

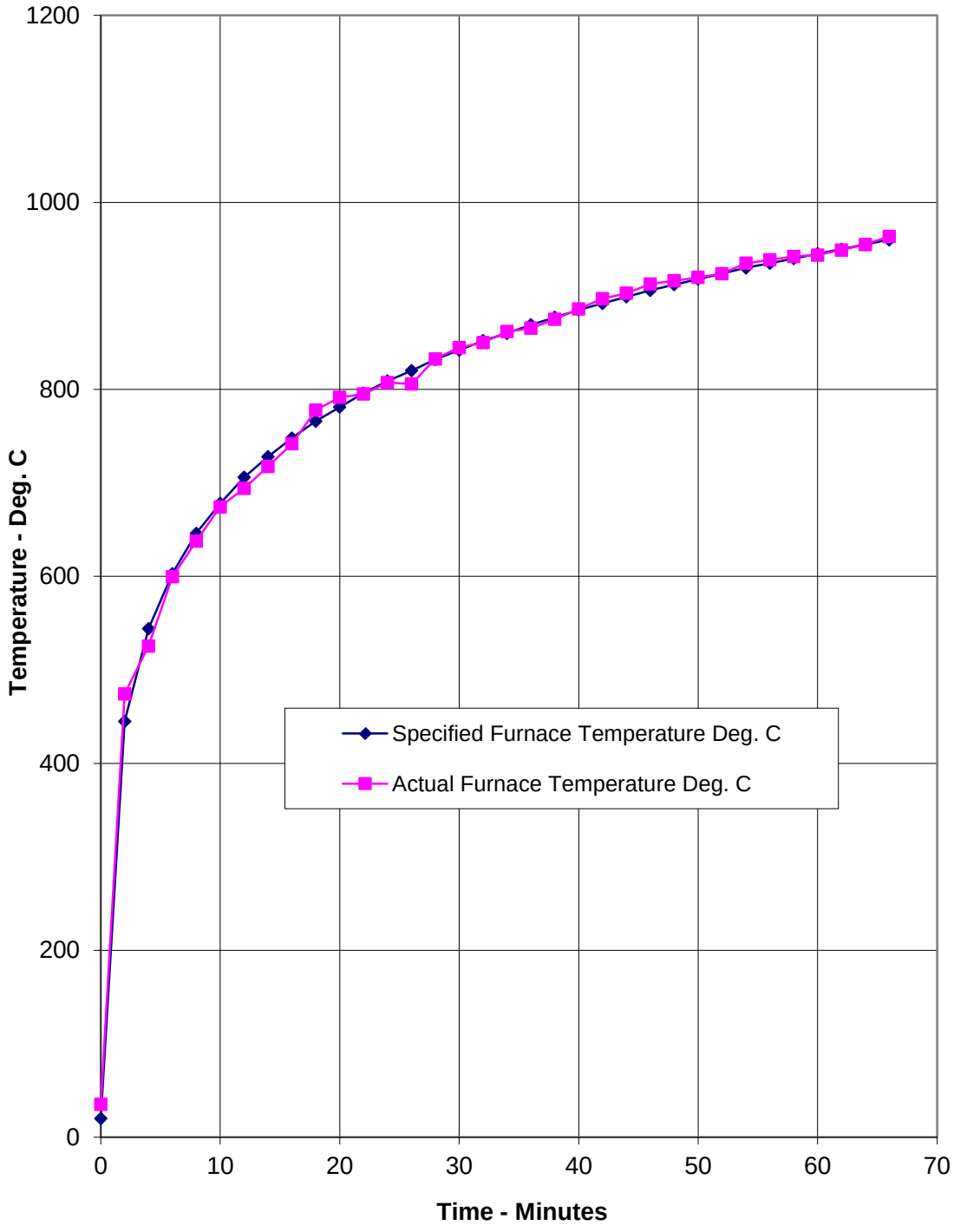

Graph showing mean unexposed surface temperature of the floor assembly

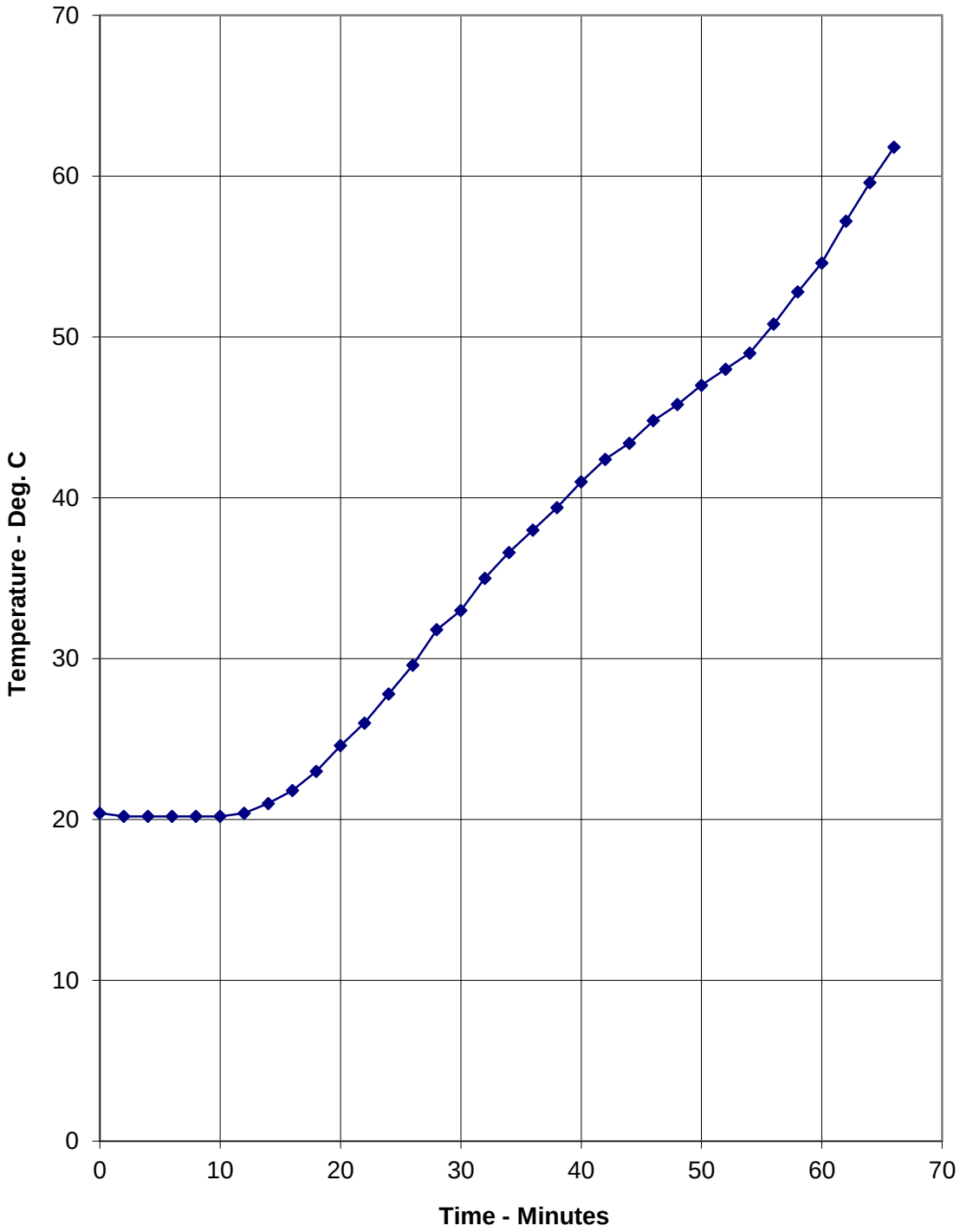

Graph showing the central vertical deflection of the floor assembly during the test

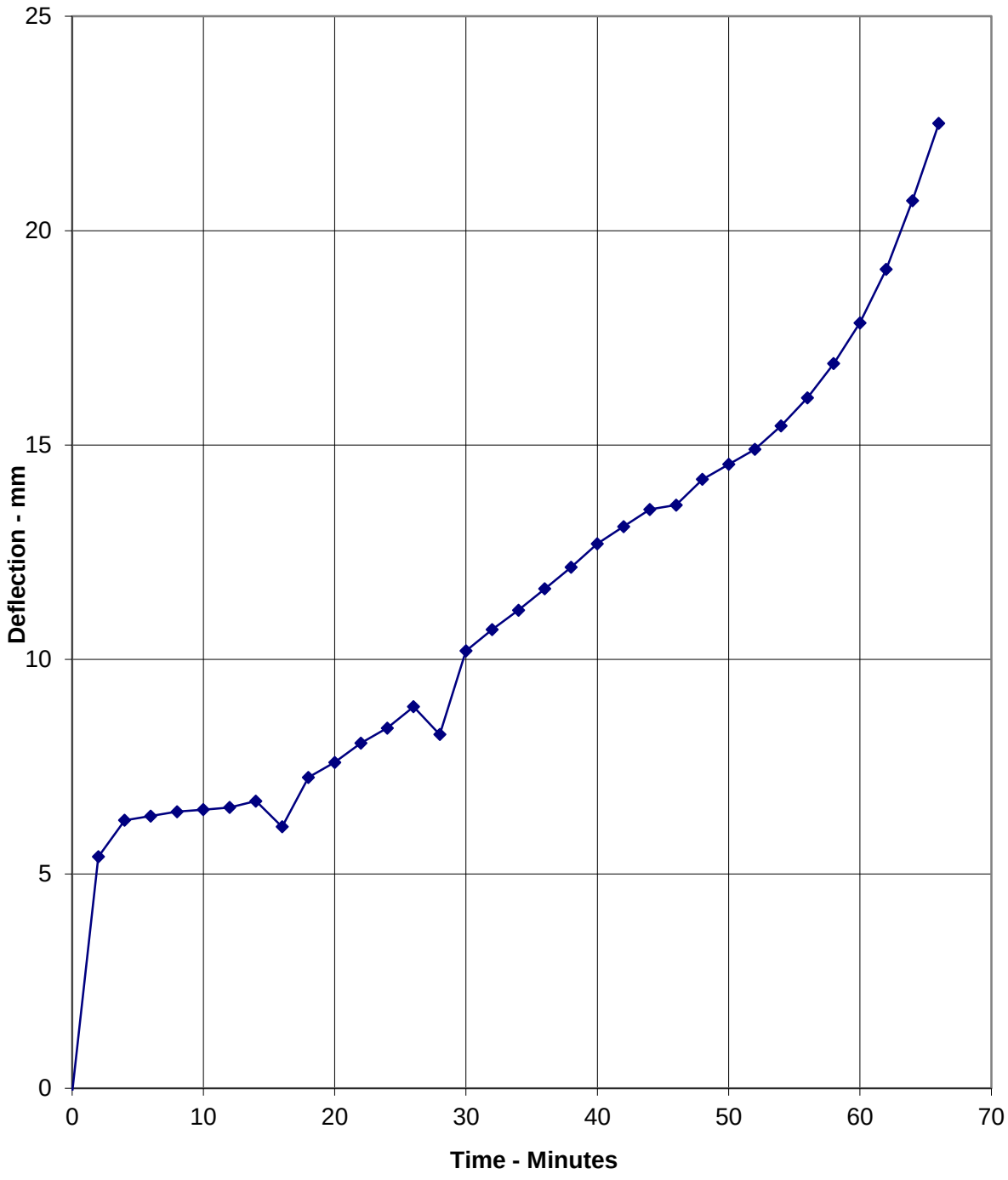

Load Calculations

1. Physical Parameters of Timber Joists

Measured Joist dimensions (d x b)	: 196 mm deep by 45 mm thick
Mean spacing (M)	: 600 mm
Effective span (L)	: 4200 mm
Timber grade of joists	: C16

2. Parameters - BS 5268: Part 2: 2002

Basic dry stress in bending	: 5.3 N/mm^2 (Table 7)
Modification factor for loading	: 1.1 (Table 2.9 (a))
Therefore working stress (F)	: 5.83 N/mm^2
Nominal density	: 370 kg/m^3

3. Total Loading Required Per Joist

Moment of Inertia (I)	: $bd^3/12$
	: $(45 \times 196^3)/12$
	: 28235760 mm^4
Distance from neutral axis to base of joist (y)	: 98 mm
Maximum bending stress	: FI/y
	: (5.83 x 282235760)/98
	: 1679739 N/mm^2
Also maximum bending stress	: $wL^2/8$
	: 1679739 N/mm^2
Where w	= Load per unit length
∴ w	= (1679739 x 8) / (4200 x 4200)
	= 0.76178 N/mm
	= 761 N/m
∴Total loading (W)	: 3196.2 N
	: 325.8 kg

4. Dead Weight

Combined weight of overall specimen:

Actual density of joist	: 438 kg/m^3
Actual density of floor boarding	: 665 kg/m^3
Actual density of ceiling board - 12.5 mm thick	: 761 kg/m^3

Effective width of floor supported per joist (m)	: 0.6 m

weight of joist	: 16.2 kg
weight of floorboard	: 36.9 kg
weight of ceiling (two layers)	: 81 kg

Total dead weight per joist	: 134.1 kg

5. **Imposed Load**

Imposed load per joist required : total load per joist - dead weight per joist
: 325.8 – 134.1
: 191.7 kg

Assuming even distribution of loading

Maximum imposed load per metre square : (191.7 x 9.81) / (4.2 x 0.6)
: 746 N/m^2
: 0.746 kN/m^2
: 76 kg/m^2

Calculation made by

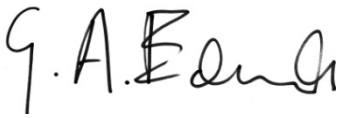

G. Edmonds
Senior Technical Officer
Fire Resistance Department

Checked by

D. Fitzsimmons
Technical Officer
For and on behalf of
Exova Warringtonfire

Performance Criteria and Test Results

Loadbearing Capacity

The maximum allowable deflection and the maximum rate of deflection for the specimen, as specified by the Standard, are calculated as 210 mm and 8.9 mm per minute respectively. The allowable rate of deflection is not applicable until the deflection exceeds $^{1}/_{30}$ of the span (i.e. 140 mm). The test construction satisfied this requirement for the total test duration of 66 minutes.

Integrity

It is required that there is no collapse of the specimen floor assembly, no sustained flaming on the unexposed surface and no loss of impermeability. The test construction satisfied this requirement for the total test duration of 66 minutes.

Insulation

It is required that the mean temperature rise of the unexposed surface shall not be greater than 140˚C and that the maximum temperature rise shall not be greater than 180˚C. Insulation failure also occurs simultaneously with integrity failure. The test construction satisfied this requirement for the total test duration of 66 minutes.

Ongoing Implications

Limitations

The results relate only to the behaviour of the specimen of the element of construction under the particular conditions of test. They are not intended to be the sole criteria for assessing the potential fire performance of the element in use, nor do they reflect the actual behaviour in fires.

The test results relate only to the specimen light fittings tested. Appendix A of BS 476: Part 20: 1987 provides guidance information on the application of fire resistance tests and the interpretation of test data. Application of the result to assemblies of different dimensions or supported in other manners or incorporating different components should be the subject of a design appraisal.

This test report is additional to that issued as WF Test Report No. 371969 and dated 14th March 2017. The original test report remains valid and is not replaced by this additional test report. The products referred to in the original report and this additional test report has not been re-tested, this report does not involve technical change or technical review of the original test report.

Review

The specification and interpretation of fire test methods are the subject of ongoing development and refinement. Changes in associated legislation may also occur. For these reasons it is recommended that the relevance of test reports over five years old should be considered by the user. The laboratory that issued the report will be able to offer, on behalf of the legal owner, a review of the procedures adopted for a particular test to ensure that they are consistent with current practices, and if required may endorse the test report.

Conclusions

Evaluation against objective

A specimen of a loadbearing timber floor assembly, protected by a plasterboard ceiling incorporating twenty down lighter fittings has been subjected to a fire resistance test in accordance with BS 476: Part 21: 1987, Clause 7.

The evaluation of the assembly against the requirements of BS 476: Part 21: 1987, Clause 7 showed that it satisfied the requirements the periods stated below:

Test Results:

Loadbearing Capacity	66 minutes*
Integrity	66 minutes*
Insulation	66 minutes*

*The test was discontinued after a period of 66 minutes.

Exova Warringtonfire
Holmesfield Road
Warrington
WA1 2DS
United Kingdom

T : +44 (0) 1925 655 116
F : +44 (0) 1925 655 419
E : warrington@exova.com
W: www.exova.com

Testing. Advising. Assuring.

Title:

The Fire Resistance Performance of a Specimen of a Loadbearing Timber Floor Assembly Protected by a Plasterboard Ceiling Designed to Provide 30 minutes Fire Resistance, Incorporating Twenty Downlight Light Fittings, Tested in Accordance with BS 476: Part 21: 1987, Clause 7

WF Report No:

371967B

Prepared for:

Integral LED
Unit 6, Iron Bridge Close, Iron Bridge Business Park, London, NW10 0UF, UK

Date:

22nd May 2017

Notified Body No:

0833

UKAS TESTING
0249

This test report is additional to that issued as WF Test report No. 371967 and dated 14th March 2017. The original test report remains valid and is not replaced by this additional test report.

Summary

Objective

To determine the fire resistance performance of a loadbearing timber floor assembly protected by a plasterboard ceiling designed to provide 30 minutes fire resistance, incorporating twenty downlight light fittings, when tested in accordance with Clause 7 of BS 476: Part 21: 1987.

Sponsor

Integral LED
Unit 6, Iron Bridge Close, Iron Bridge Business Park, London, NW10 0UF,

Summary of Tested Assembly

The timber floor had overall nominal dimensions of 4380 mm long by 2950 mm wide and comprised softwood timber joists at 600 mm centres. The upper surface of the floor comprised nominally 22 mm thick tongue and grooved chipboard flooring.

The floor assembly was protected on its underside by a direct fixed ceiling, formed from a single layer of 12.5 mm thick British Gypsum Fireline plasterboard, the ceiling was screw fixed to the underside of the floor joists.

The floor supported an evenly distributed load of 0.88 kN/m^2.

The ceiling incorporated twenty downlight light fittings.

Eleven of which were referenced J, K, L, M, N, O, P, R, Q, S, T and are subjected to a separate test report referenced 371967A.

Nine of which were provided by the test sponsor and were referenced as follows:

Test Ref.	Model Ref.	Description
A	ILDLFR60FXXX	Round, fixed, Agate LED recessed downlight, 60 mm diameter cut-out
B	ILDLFR70EXXX	Round, fixed, Agate LED recessed downlight, 70 mm diameter cut-out
C	ILDLFR70DXXX	Round, fixed, Agate LED recessed downlight, 70 mm diameter cut-out, with bracket
D	ILDLFR70DXXX	Round, fixed, Agate LED recessed downlight, 70 mm diameter cut-out, without bracket
E	ILDLFR70DXXX	Round, fixed, Agate LED recessed downlight, 100 mm diameter cut-out, Slim Fire accessory
F	ILDLFR70DXXX	Square, fixed, LED recessed downlight, 70 mm diameter cut-out, with slim fire square bezel
G	ILDLFR70DXXX	Square, fixed, LED recessed downlight, 70 mm diameter cut-out, with slim fire square bezel with bracket
H	ILDLFR70EXXX	Square, fixed down light, 70 mm by 70 mm cut-out, with slim fire square bezel
I	ILDLFR70FXXX	Square, fixed down light, 70 mm by 70 mm cut-out, with trimless fire square bezel

Test Results:

Loadbearing Capacity	36 minutes*
Integrity	36 minutes*
Insulation	36 minutes*

*The test was discontinued after a period of 36 minutes

Date of Test 22nd October 2016

This report may only be reproduced in full. Extracts or abridgements of reports shall not be published without permission of Exova Warringtonfire.

Signatories

Responsible Officer
D. Fitzsimmons*
Technical Officer

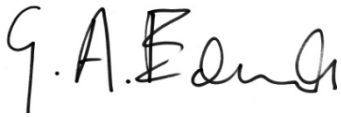

Approved
G. Edmonds*
Senior Technical Officer

* For and on behalf of **Exova Warringtonfire.**

Report Issued

Date: 22nd May 2017

This test report is additional to that issued as WF Test report No. 371967 and dated 14th March 2017. The original test report remains valid and is not replaced by this additional test report.

This copy has been produced from a .pdf format electronic file that has been provided by **Exova Warringtonfire** to the sponsors of the report and must only be reproduced in full. Extracts or abridgements of reports must not be published without permission of **Exova Warringtonfire**. The pdf copy supplied is the sole authentic version of this document. All pdf versions of this report bear authentic signatures of the responsible **Exova Warringtonfire** staff.

CONTENTS **PAGE NO.**

SUMMARY **2**
SIGNATORIES **4**
TEST PROCEDURE **6**
TEST SPECIMENS **7**
SCHEDULE OF COMPONENTS **19**
INSTRUMENTATION **21**
TEST PHOTOGRAPHS **23**
TEMPERATURE & DEFLECTION DATA **25**
LOAD CALCULATIONS **35**
PERFORMANCE CRITERIA AND TEST RESULTS **37**
ONGOING IMPLICATIONS **37**
CONCLUSIONS **38**

Test Procedure

Introduction

The specimen tested was of a loadbearing construction. The test was conducted in accordance with Clause 7 of BS 476: Part 21: 1987, 'Methods for determination of the fire resistance of loadbearing elements of construction'. This test report should be read in conjunction with that Standard and with BS 476: Part 20: 1987, 'Method for determination of the fire resistance of elements of construction (general principles)'.

The purpose of the test was to evaluate the performance of a timber floor construction protected by a ceiling of previously proven fire resistance, when incorporating down lighter fitting assemblies.

The specimen was judged on its ability to comply with the performance criteria for loadbearing capacity, integrity and insulation, as required by BS 476: Part 21: 1987, Clause 7.

Fire Test Study Group/EGOLF

Certain aspects of some fire test specifications are open to different interpretations. The Fire Test Study Group and EGOLF have identified a number of such areas and have agreed Resolutions which define common agreement of interpretations between fire test laboratories which are members of the Groups. Where such Resolutions are applicable to this test they have been followed.

Instruction To Test

The test was conducted on the 22nd October 2016 at the request of, the test sponsor.

Mr. A. Gooding a representative of the test sponsor witnessed the test.

Test Assembly Construction

A comprehensive description of the test construction is given in the Schedule of Components. The description is based on a detailed survey of the specimens and information supplied by the sponsors of the test.

Installation

Representatives of Exova Warringtonfire assembled the floor construction and installed the down lighters on the 20th October 2016.

Conditioning

The specimens' storage, construction, and test preparation took place in the test laboratory over a total combined time of 3 days. Throughout this period of time both the temperature and the humidity of the laboratory were measured and recorded as being within a range of from 11°C to 16°C and 62% to 81% respectively.

Test Specimens

Figure 1- General Elevation of Test Specimens

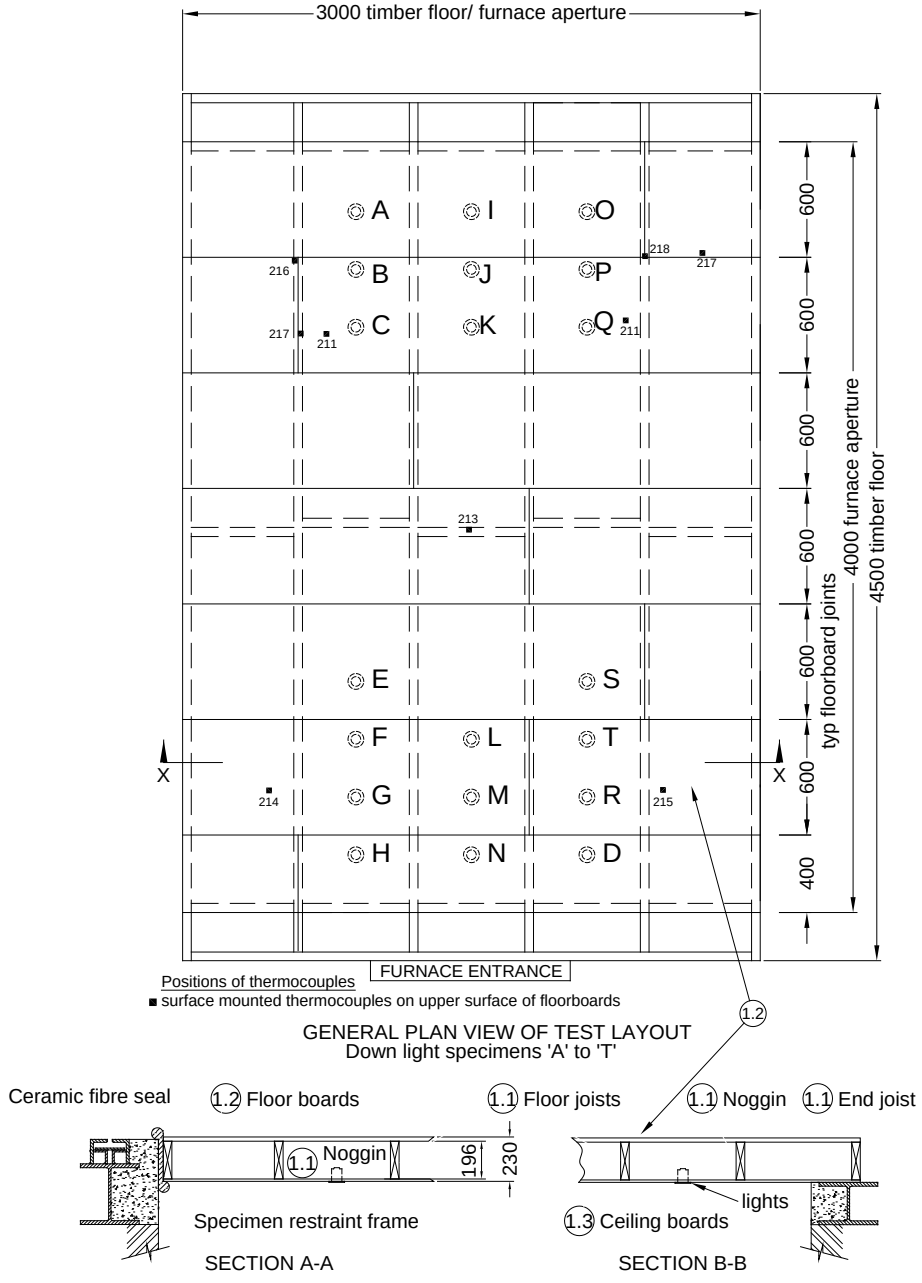

Do not scale. All dimensions are in mm

Figure 2 – Details of Downlighter Positions

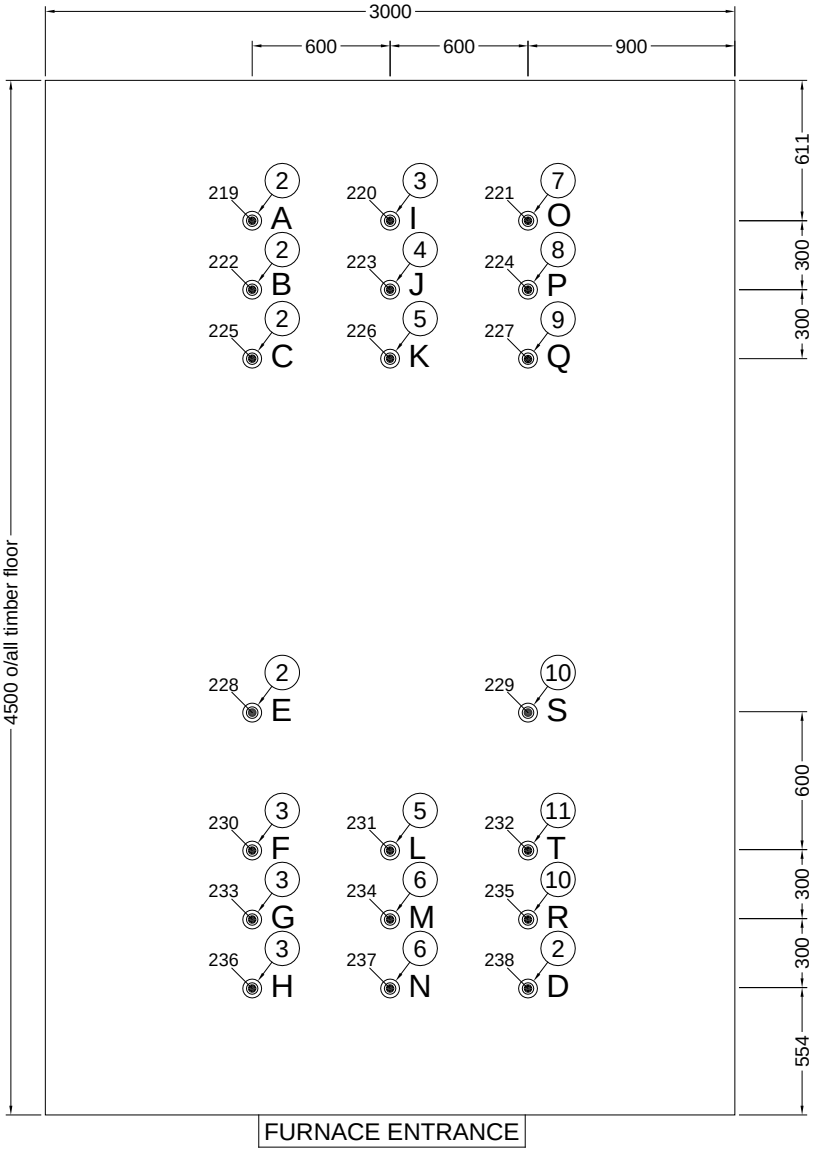

DOWNLIGHTER LAYOUT
PLAN OF THERMOCOUPLE POSITIONS

● Mineral insulated thermocouples at mid-cavity height

Do not scale. All dimensions are in mm

Figure 3 – Details of Downlighters Specimen A

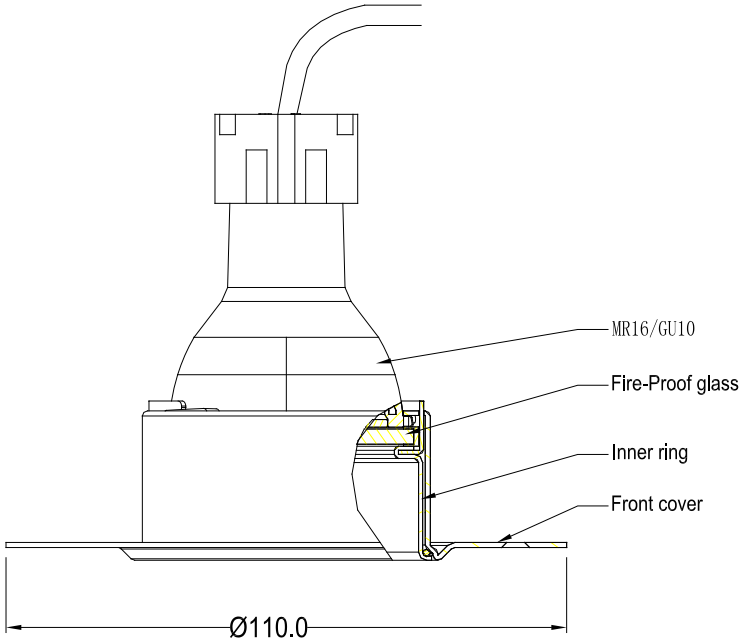

Fixed
ILDLFR60FXXX
Cut out:ϕ60

Do not scale. All dimensions are in mm

Figure 4 – Details of Downlighters Specimen B

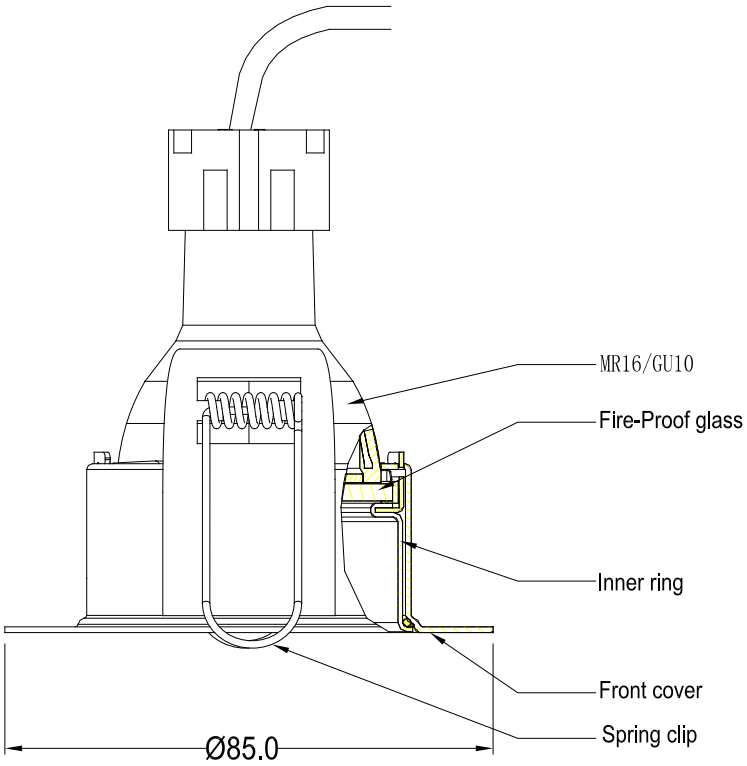

Fixed
ILDLFR70EXXX
Cut out:ϕ70

Do not scale. All dimensions are in mm

Figure 5 – Details of Downlighters Specimen C

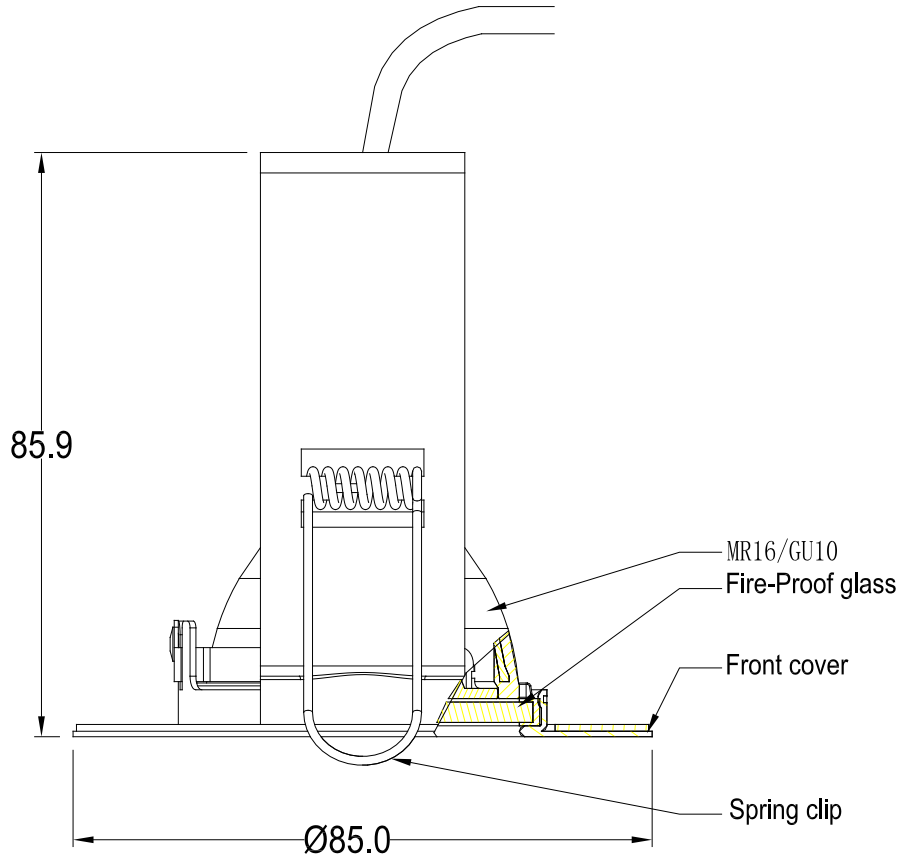

Fixed
ILDLFR70DXXX
with bracket
Cut out:ϕ70

Do not scale. All dimensions are in mm

Figure 6 – Details of Downlighters Specimen D

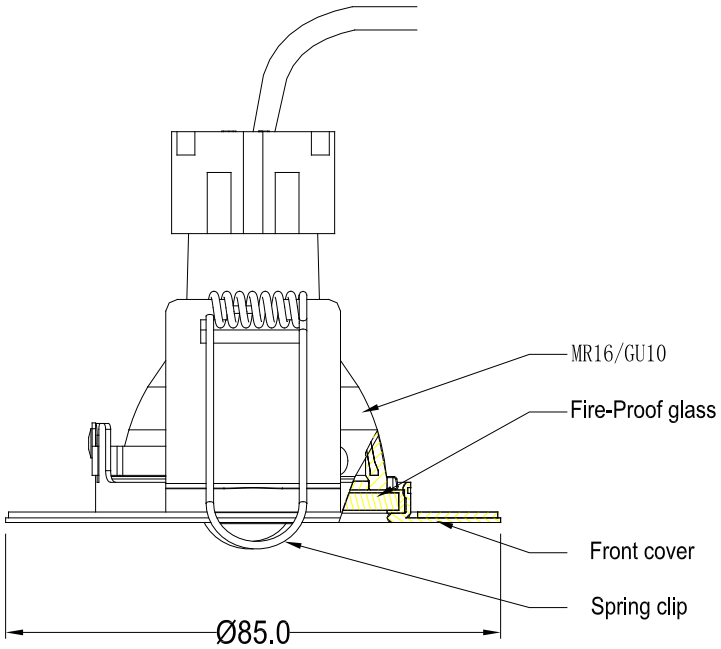

Fixed
ILDLFR70DXXX
Cut out:Φ70

Do not scale. All dimensions are in mm

Figure 7 – Details of Downlighters Specimen E

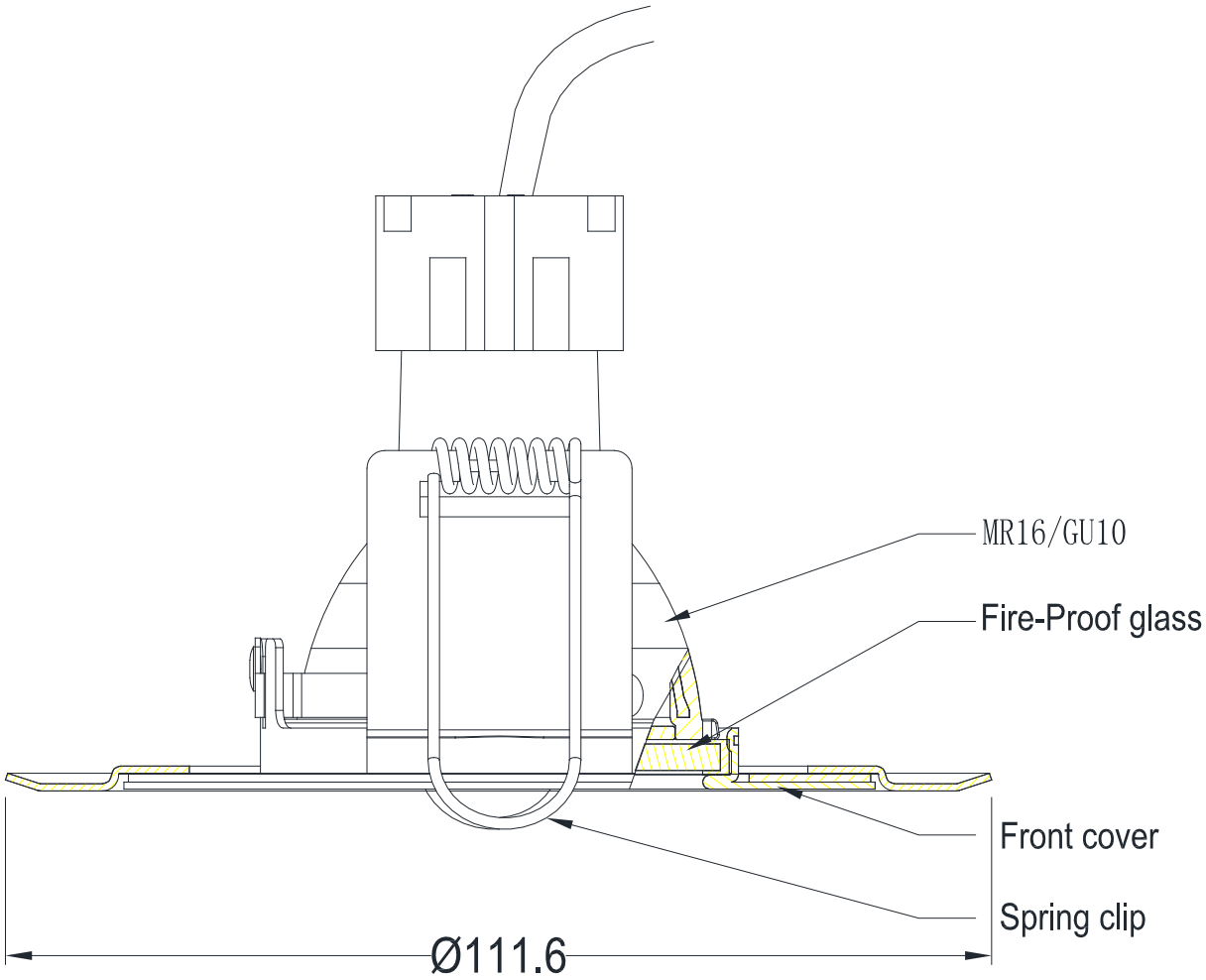

Fixed
ILDLFR70DXXX
accessory of Slim Fire
Cut out:ϕ100mm

Do not scale. All dimensions are in mm

Figure 8 – Details of Downlighters Specimen F

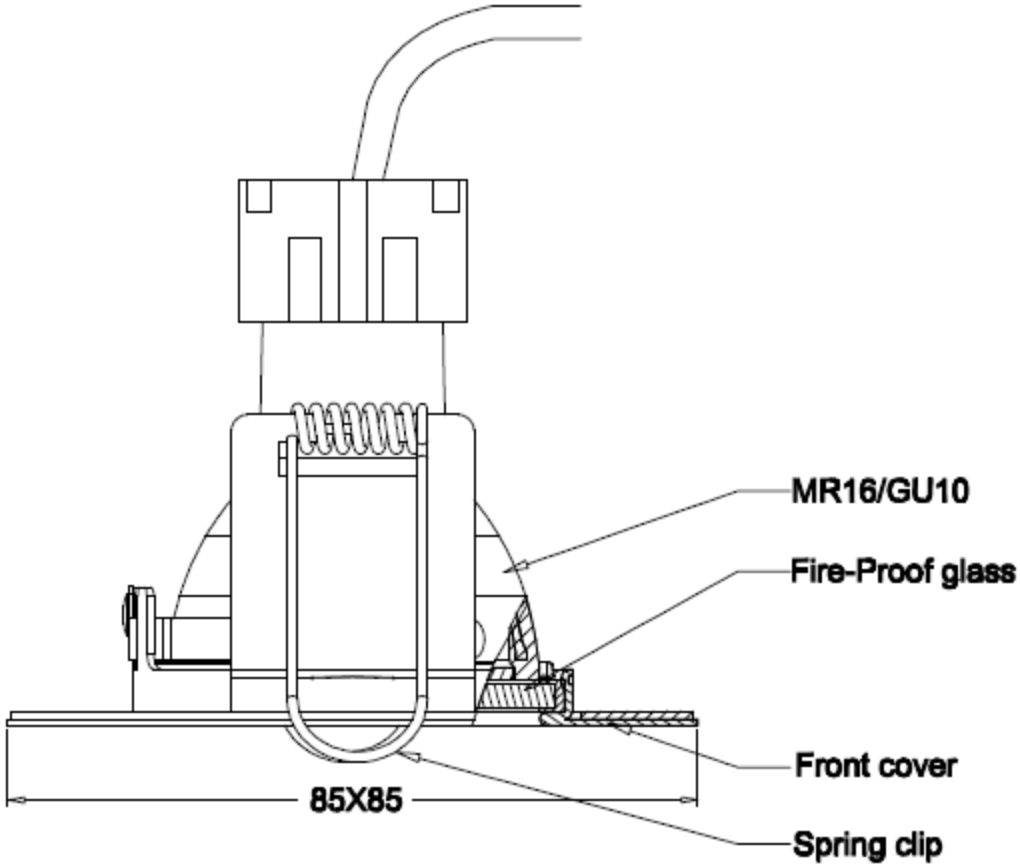

Fixed model
ILDLFR70DXXX
Slim fire square bezel
Cut out:Ø70mm

Do not scale. All dimensions are in mm

Figure 9 – Details of Downlighters Specimen G

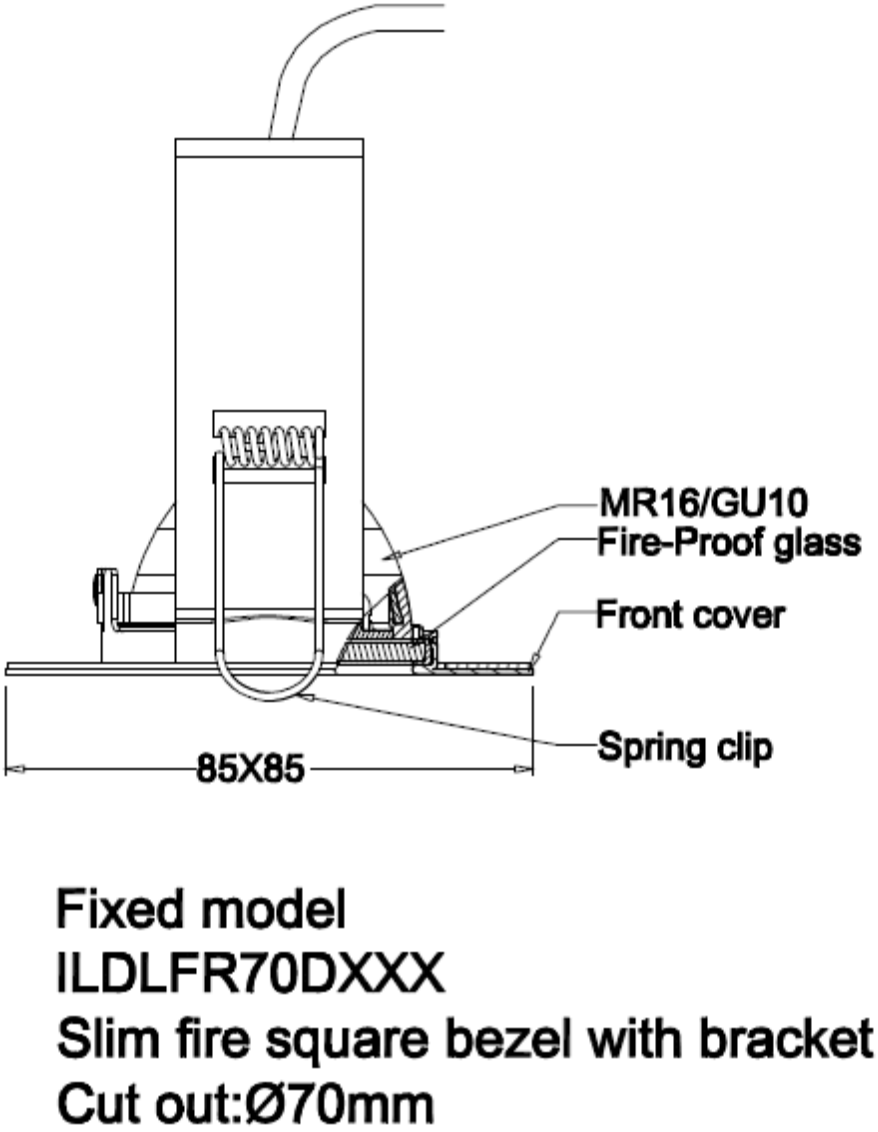

Do not scale. All dimensions are in mm

Figure 10 – Details of Downlighters Specimen H

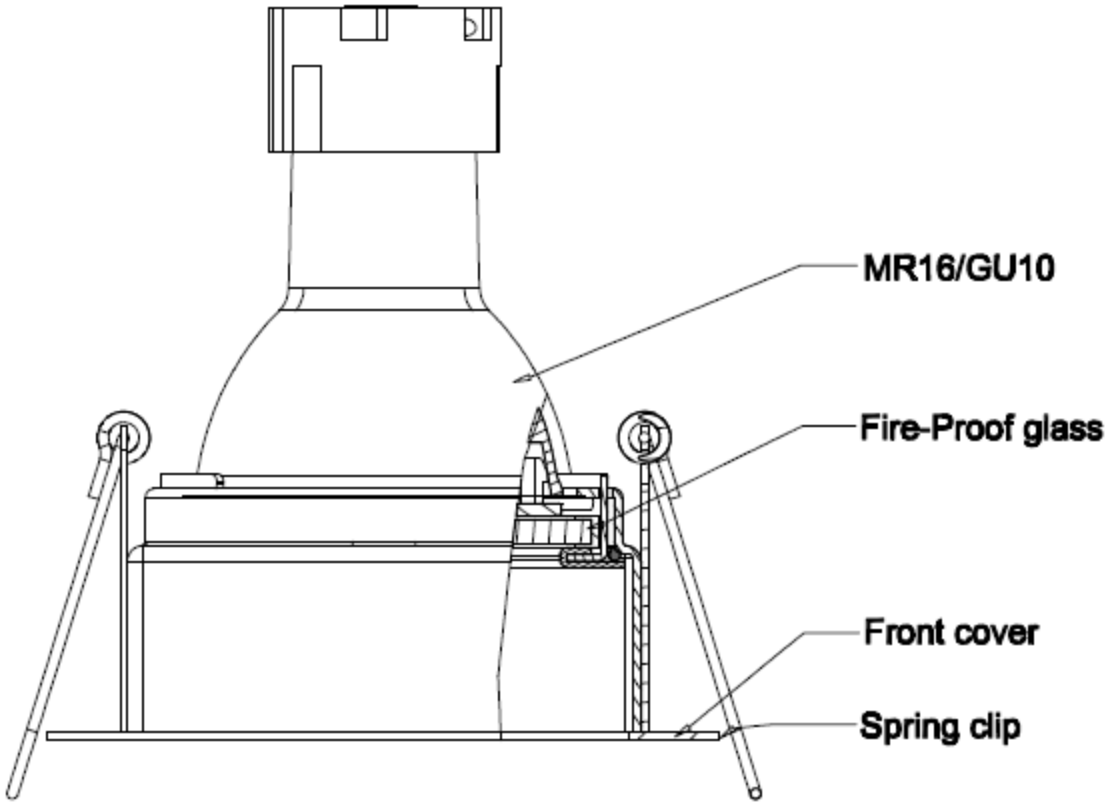

Fixed model
ILDLFR70EXXX
Slim fire square bezel
Cut out:Ø70X70mm

Do not scale. All dimensions are in mm

Figure 11 – Details of Downlighters Specimen I

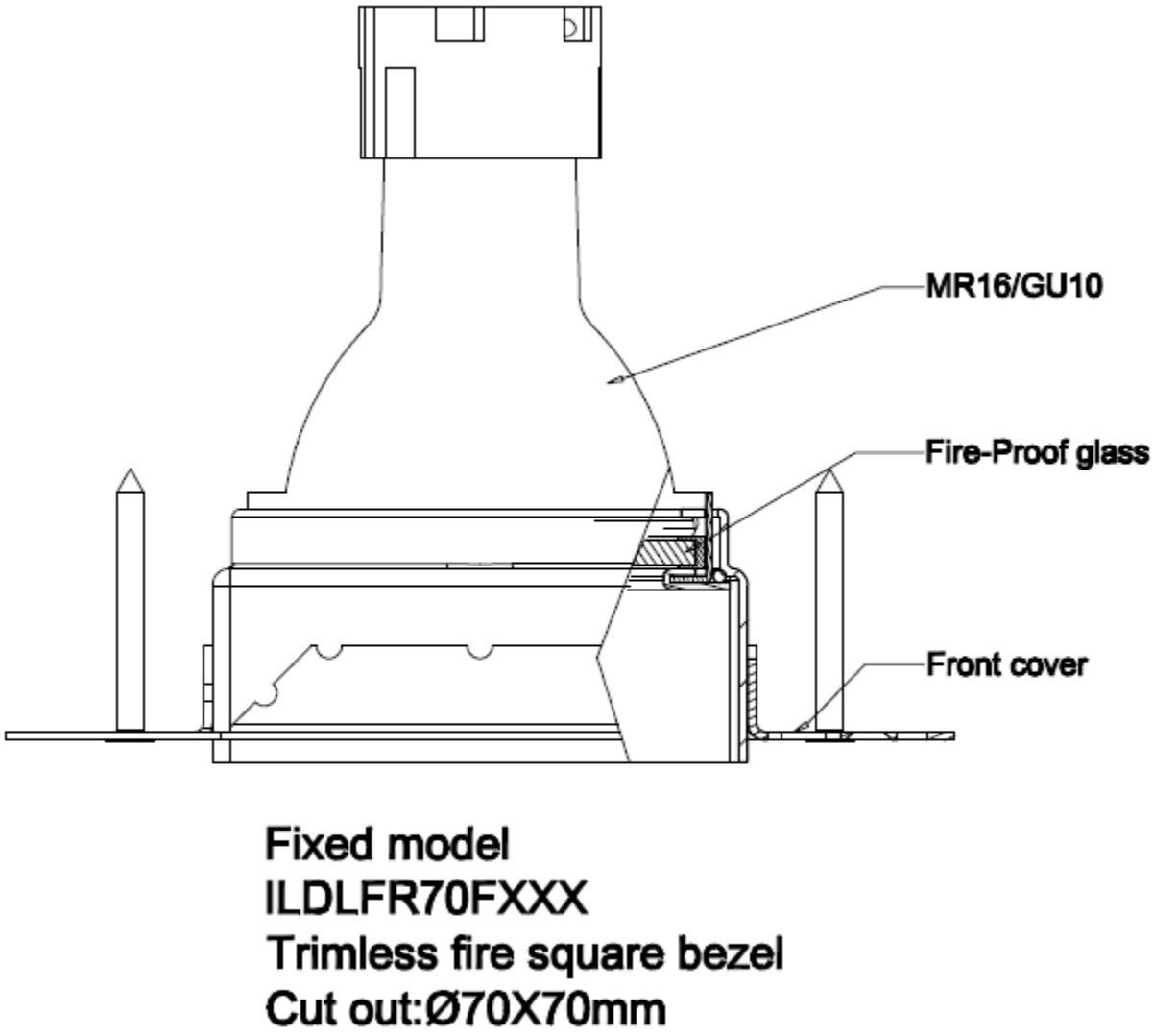

Do not scale. All dimensions are in mm

Figure 12 – Details of Downlighters Specimen J to T

ITEMS REPORTED SEPARATELY IN THE TEST REPORT REFERENCED 371967A

Do not scale. All dimensions are in mm

Schedule of Components

(Refer to Figures 1 to 11)
(All values are nominal unless stated otherwise)
(All other details are as stated by the sponsors)

Item		**Description**
1. Timber Floor		
1.1 Floor Joists		
Material	:	British Home-grown, rough sawn softwood, kiln dried
Grade	:	C16, to BS EN 519
Density	:	511 kg/m^3
Size	:	45 mm x 196 mm
Joist centres	:	600 mm
1.2 Floor Boards		
Material	:	Flooring grade tongue and groove chipboards
Reference	:	FSC E1 P5
Thickness	:	22 mm
Size	:	600 mm wide
Fixing	:	Fixed in a single layer with 6 mm diameter x 60 mm long countersunk steel screws to floor joists at 300 mm centres
1.3 Ceiling Boards		
Manufacturer	:	British Gypsum
Type / reference	:	Gyproc Fireline Wallboard
Density	:	803 kg/m^3
Thickness	:	1 off layers 12.5 mm thick
Fixing		
i. method	:	The boards were screw fixed to the soffit of the joists with all joints staggered
ii. fixings	:	Drywall self drill and tapping screws 38 mm
iii. frequency	:	150 mm centres along joints and 150 mm to the perimeter of the ceiling
2. Specimens A, B, C, D, E		
Manufacturer	:	Integral LED
Type	:	Round, fixed, Agate LED recessed downlight
Reference	:	See Figs 3 to 7.
Materials		
i. front cover	:	Steel
ii. inner ring	:	Steel
iii. spring	:	Stainless steel
iv. diffuser	:	Pyrex glass
Overall dimensions and construction	:	See Figs 3 to 7.
Cut out size	:	Varies see relevant figure.
Driver	:	None
Lamp	:	GU10/MR16

Item		Description
3. Specimen F, G, H, I		
Manufacturer	:	Integral LED
Type	:	Square, fixed, LED recessed downlight
Reference	:	See Figs 8 to 11.
Materials		
i. front cover	:	Steel
ii. spring	:	Stainless steel
iii. diffuser	:	Pyrex glass
Overall dimensions and construction	:	Please see Figs. 8 to 11
Cut out size	:	Various see relevant figures
Driver	:	None
Lamp	:	GU10/MR16
4. Specimen J	:	Specimen reported separately
5. Specimen K, L	:	Specimens reported separately
6. Specimen M, N	:	Specimens reported separately
7. Specimens O	:	Specimen reported separately
8. Specimens P	:	Specimen reported separately
9. Specimen Q	:	Specimen reported separately
10. Specimens R, S	:	Specimens reported separately
11. Specimen T	:	Specimen reported separately

Instrumentation

General

The instrumentation was provided in accordance with the requirements of the Standard.

Furnace

The furnace was controlled so that its mean temperature complied with the requirements of BS 476: Part 20: 1987, Clause 3.1. using eight mineral insulated thermocouples distributed over a plane 100 mm from the underside of the ceiling.

Thermocouple Allocation

Thermocouples were provided to monitor the unexposed surface of the floor assembly and the output of all instrumentation was recorded at no less than one minute intervals as follows:

The locations and reference numbers of the various unexposed surface and internal thermocouples are shown in Figure 1.

Roving Thermocouple

A roving thermocouple was available to measure temperatures on the unexposed surface of the specimen at any position which might appear to be hotter than the temperatures indicated by the fixed thermocouples.

Integrity criteria

Cotton pads and gap gauges were available to evaluate the impermeability of the test construction to hot gases.

Furnace Pressure

After the first five minutes of testing and for the remainder of the test, the furnace atmospheric pressure was controlled so that it complied with the requirements of BS 476: Part 20: 1987, Clause 3.2.2. The calculated pressure differential relative to the laboratory atmosphere at a position 100 mm below the underside of the assembly was 20 (+0, -2) Pa.

Test Observations

Time		All observations are from the unexposed face unless noted otherwise.
mins	**secs**	The ambient air temperature in the vicinity of the test construction was 13ºC at the start of the test with a maximum variation of +1ºC during the test.
00	**00**	**The test commences.**
01	**00**	When viewed from the exposed face, flames are seen spreading across the face of the ceiling.
05	**00**	When viewed from the exposed face the paper face of the specimen has ignited and is observed charring.
07	**00**	Very light steam/smoke release is observed from the joints of the timber joists.
10	**00**	When viewed from the exposed face, the paper face of the specimen has now completely discoloured black, all light fixings appear to be still in place.
15	**00**	No significant changes are observed on the unexposed face.
18	**00**	When viewed from the exposed face, the joints between the boards are observed expanding. All light fixings continue to appear in place.
24	**00**	When viewed from the exposed face, the boards are glowing bright orange as the joints continue to expand. All light fixings appear to be still in place.
30	**00**	When viewed from the exposed face, the boards are glowing bright orange as the joints continue to expand. All light fixings appear to be still in place.
32	**00**	When viewed from the exposed face flames are seen spreading along the board joints.
36	**00**	**The test is discontinued.**

Test Photographs

The exposed face of the assembly prior to testing

The unexposed face of the assembly after 10 minutes of testing

View of the exposed ceiling after a test duration of approximately 30 minutes

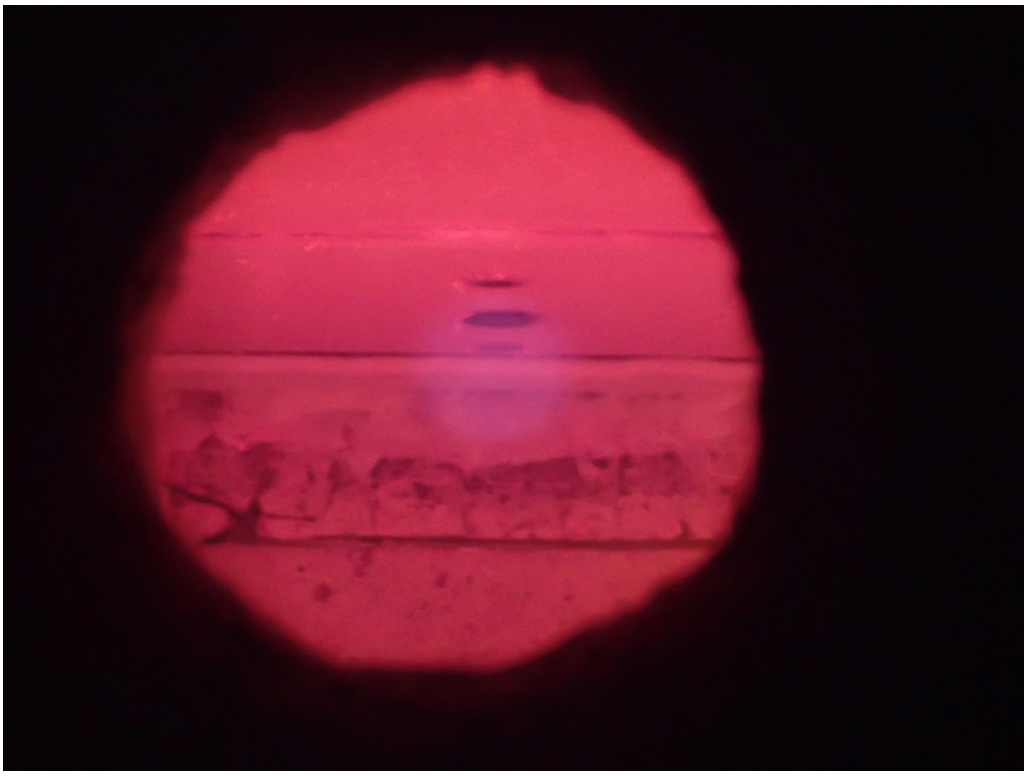

The unexposed face of the assembly after 36 minutes of testing

Temperature & Deflection Data

Mean furnace temperature, together with the temperature/time relationship specified in the Standard

Time Mins	Specified Furnace Temperature Deg. C	Actual Furnace Temperature Deg. C
0	20	35
1	349	515
2	445	485
3	502	516
4	544	531
5	576	604
6	603	618
7	626	618
8	646	634
9	663	645
10	678	665
11	693	677
12	706	705
13	717	718
14	728	724
15	739	727
16	748	730
17	757	734
18	766	764
19	774	766
20	781	772
21	789	788
22	796	801
23	802	796
24	809	801
25	815	807
26	820	824
27	826	829
28	832	834
29	837	836
30	842	839
31	847	843
32	852	846
33	856	856
34	860	859
35	865	867
36	869	869

Individual and mean temperatures recorded on the unexposed surface of the floor assembly

Time Mins	T/C Number 211 Deg. C	T/C Number 212 Deg. C	T/C Number 213 Deg. C	T/C Number 214 Deg. C	T/C Number 215 Deg. C	Mean Temp Deg. C
0	16	17	17	17	14	16
1	16	17	16	17	14	16
2	16	17	16	17	14	16
3	16	17	16	17	14	16
4	16	17	16	17	14	16
5	16	17	16	17	13	16
6	17	17	16	17	14	16
7	17	17	16	17	14	16
8	17	17	17	17	14	16
9	17	17	17	18	14	17
10	18	18	17	18	14	17
11	18	19	17	19	15	18
12	19	19	17	20	15	18
13	20	20	18	21	16	19
14	21	21	18	21	17	20
15	22	22	18	22	17	20
16	23	23	19	23	18	21
17	24	24	19	24	19	22
18	25	25	20	25	20	23
19	26	26	20	26	21	24
20	27	27	21	27	22	25
21	28	28	22	28	22	26
22	29	29	22	29	23	26
23	30	30	23	30	24	27
24	31	31	24	31	25	28
25	32	33	24	32	26	29
26	34	34	25	33	27	31
27	35	36	26	33	27	31
28	37	38	26	34	28	33
29	40	42	27	36	29	35
30	44	45	28	37	30	37
31	48	50	29	38	31	39
32	53	54	29	40	32	42
33	58	58	30	43	34	45
34	63	63	31	45	36	48
35	68	66	32	49	38	51
36	72	70	33	52	41	54

Individual temperatures recorded adjacent to joints in the flooring

Time Mins	T/C Number 216 Deg. C	T/C Number 217 Deg. C	T/C Number 218 Deg. C
0	15	15	15
1	15	15	15
2	15	15	15
3	15	15	15
4	15	15	15
5	15	15	15
6	15	15	15
7	15	15	15
8	15	15	15
9	15	16	15
10	15	16	16
11	16	17	16
12	16	17	16
13	16	18	17
14	16	19	17
15	17	20	18
16	17	21	18
17	18	22	19
18	19	23	20
19	19	24	20
20	20	26	21
21	20	27	22
22	21	28	23
23	22	29	24
24	23	30	25
25	23	32	27
26	24	34	28
27	25	35	29
28	26	38	30
29	27	41	32
30	28	44	33
31	29	48	35
32	30	51	36
33	31	55	37
34	33	58	39
35	35	61	40
36	37	64	42

Individual temperatures recorded adjacent to the light fittings at mid height of the cavity

Time Mins	T/C Number 219 Deg. C	T/C Number 220 Deg. C	T/C Number 221 Deg. C	T/C Number 222 Deg. C	T/C Number 223 Deg. C	T/C Number 224 Deg. C	T/C Number 225 Deg. C
0	17	18	17	20	20	19	20
1	18	18	18	20	20	20	20
2	24	27	23	28	30	24	26
3	37	43	38	40	45	41	42
4	48	53	49	49	52	49	51
5	55	59	57	55	57	56	59
6	60	63	62	59	60	63	64
7	64	69	67	65	64	72	70
8	71	78	75	72	72	81	78
9	79	85	81	76	79	85	84
10	83	91	86	81	83	98	88
11	86	95	90	83	86	107	91
12	90	98	92	86	88	110	92
13	92	103	96	89	92	112	91
14	94	105	99	91	95	110	94
15	97	110	103	94	98	113	93
16	100	113	106	96	102	116	94
17	102	114	109	99	108	125	95
18	106	118	113	105	123	141	98
19	111	131	120	113	135	152	102
20	123	148	134	131	154	160	114
21	143	167	152	147	175	166	137
22	159	182	169	164	188	181	158
23	174	193	184	180	200	191	172
24	185	203	197	192	209	203	182
25	195	211	205	200	220	216	192
26	204	217	214	206	225	222	202
27	210	225	220	211	228	223	211
28	216	232	229	216	233	237	218
29	223	240	239	222	240	240	226
30	229	248	247	228	243	247	237
31	234	255	252	234	249	250	244
32	244	261	262	241	257	256	253
33	248	272	269	245	263	261	259
34	255	277	275	250	268	266	265
35	261	285	280	256	276	276	271
36	270	291	289	262	282	288	277

Individual temperatures recorded adjacent to the light fittings at mid height of the cavity

Time Mins	T/C Number 226 Deg. C	T/C Number 227 Deg. C	T/C Number 228 Deg. C	T/C Number 229 Deg. C	T/C Number 230 Deg. C	T/C Number 231 Deg. C	T/C Number 232 Deg. C	T/C Number 233 Deg. C
0	20	20	20	17	18	18	18	24
1	20	20	20	18	18	18	18	24
2	27	26	31	22	31	21	22	33
3	41	42	46	38	46	35	32	49
4	50	51	54	47	57	48	44	61
5	58	57	57	56	62	56	50	66
6	61	62	60	62	65	61	58	69
7	67	68	61	64	73	64	62	74
8	77	77	70	71	81	72	69	83
9	81	85	75	78	85	77	76	89
10	83	92	79	83	90	82	81	94
11	86	97	83	87	93	86	86	97
12	88	106	84	90	96	89	90	101
13	89	108	89	93	98	92	94	103
14	92	118	88	98	101	95	98	107
15	94	121	94	100	107	97	102	110
16	95	130	95	100	108	99	105	112
17	97	131	98	102	108	101	108	115
18	101	125	97	106	110	103	112	119
19	110	121	99	113	116	106	111	120
20	128	135	109	113	124	109	113	126
21	149	155	129	122	132	113	127	131
22	168	179	146	135	148	119	128	142
23	181	196	157	162	169	133	134	159
24	190	207	168	184	189	158	146	176
25	197	212	180	197	204	178	171	190
26	203	220	190	213	216	187	189	201
27	211	223	194	220	224	199	210	211
28	219	237	199	227	230	210	217	218
29	227	238	211	234	242	220	221	225
30	235	250	217	239	251	227	230	234
31	240	256	224	250	260	236	240	240
32	245	266	227	253	265	242	248	248
33	252	272	238	262	270	250	256	253
34	258	282	243	269	274	256	262	261
35	265	285	244	286	282	264	272	268
36	271	288	252	285	288	270	278	274

Individual temperatures recorded adjacent to the light fittings at mid height of the cavity

Time Mins	T/C Number 234 Deg. C	T/C Number 235 Deg. C	T/C Number 236 Deg. C	T/C Number 237 Deg. C	T/C Number 238 Deg. C
0	18	18	21	21	22
1	18	19	21	21	22
2	23	23	28	26	25
3	33	31	46	32	33
4	44	42	56	41	40
5	52	50	63	51	49
6	58	57	64	58	56
7	61	61	67	61	60
8	70	65	72	65	65
9	76	72	81	72	70
10	81	78	85	77	77
11	85	82	89	81	86
12	89	86	91	84	90
13	92	91	93	88	92
14	94	96	96	90	93
15	96	99	98	92	98
16	99	103	100	94	98
17	101	106	102	96	100
18	103	108	104	98	107
19	105	110	106	101	104
20	108	111	109	103	107
21	111	113	113	105	111
22	115	116	120	108	112
23	124	118	135	113	112
24	141	126	148	123	117
25	161	142	161	134	126
26	175	157	171	145	137
27	187	171	180	153	147
28	198	184	191	160	154
29	207	194	200	169	164
30	217	203	205	175	172
31	226	210	212	180	178
32	232	219	218	187	184
33	240	226	225	191	190
34	245	232	230	197	198
35	251	237	236	202	207
36	255	244	242	208	213

Deflection and rate of deflection of the floor assembly during the test

Time Minutes	Central Vertical Deflection mm	Rate of Deflection mm/min
0	0	0
1	4	4
2	5	1
3	6	1
4	6	0
5	5	-1
6	5	0
7	5	0
8	5	0
9	5	0
10	5	0
11	5	0
12	5	0
13	5	0
14	5	0
15	5	0
16	5	0
17	5	0
18	5	0
19	5	0
20	5	0
21	5	0
22	5	0
23	5	0
24	5	0
25	5	0
26	5	0
27	5	0
28	5	0
29	6	1
30	6	0
31	7	1
32	7	0
33	8	1
34	9	1
35	9	0
36	11	2

Graph showing specified and actual furnace temperatures

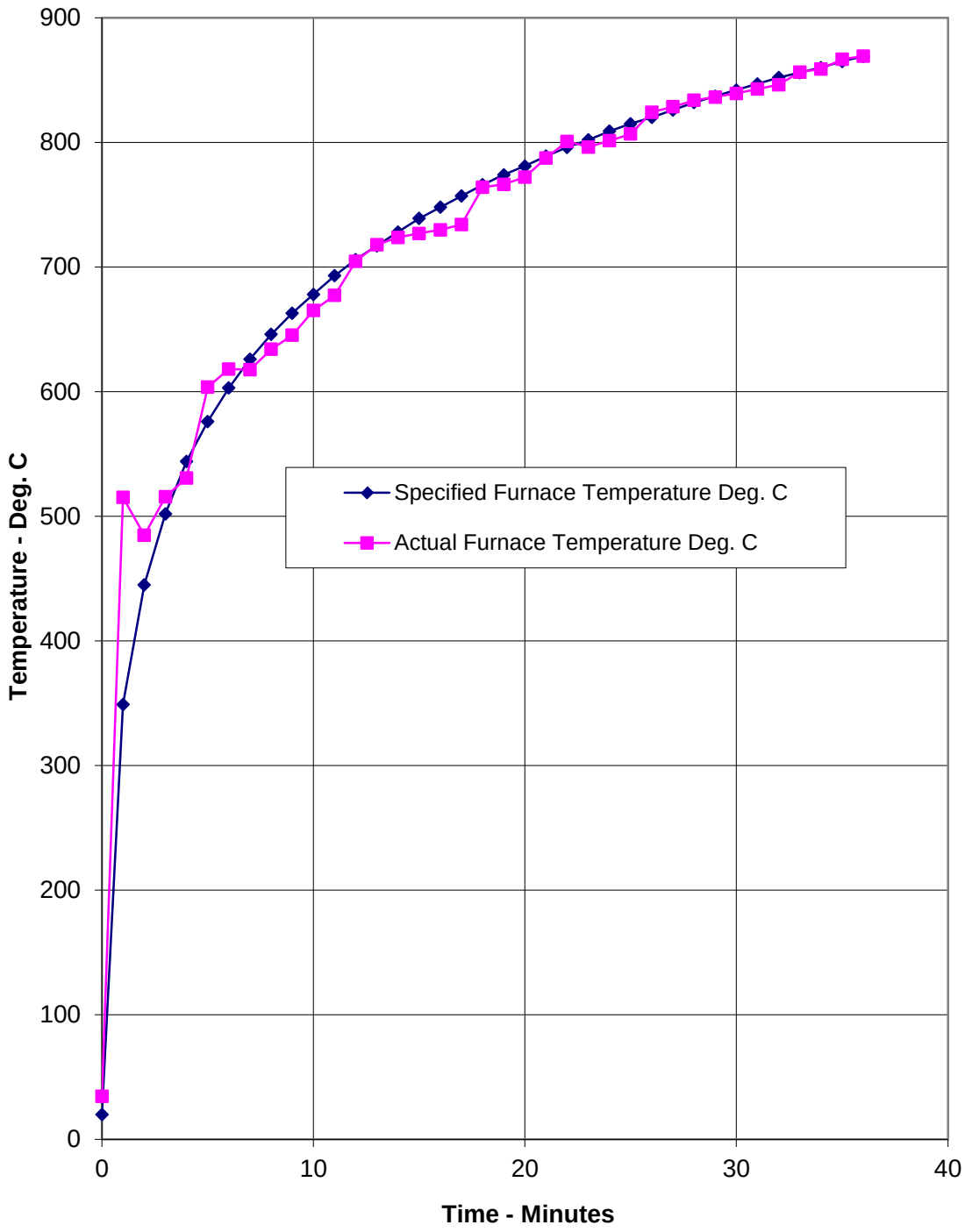

Graph showing mean unexposed surface temperature of the floor assembly

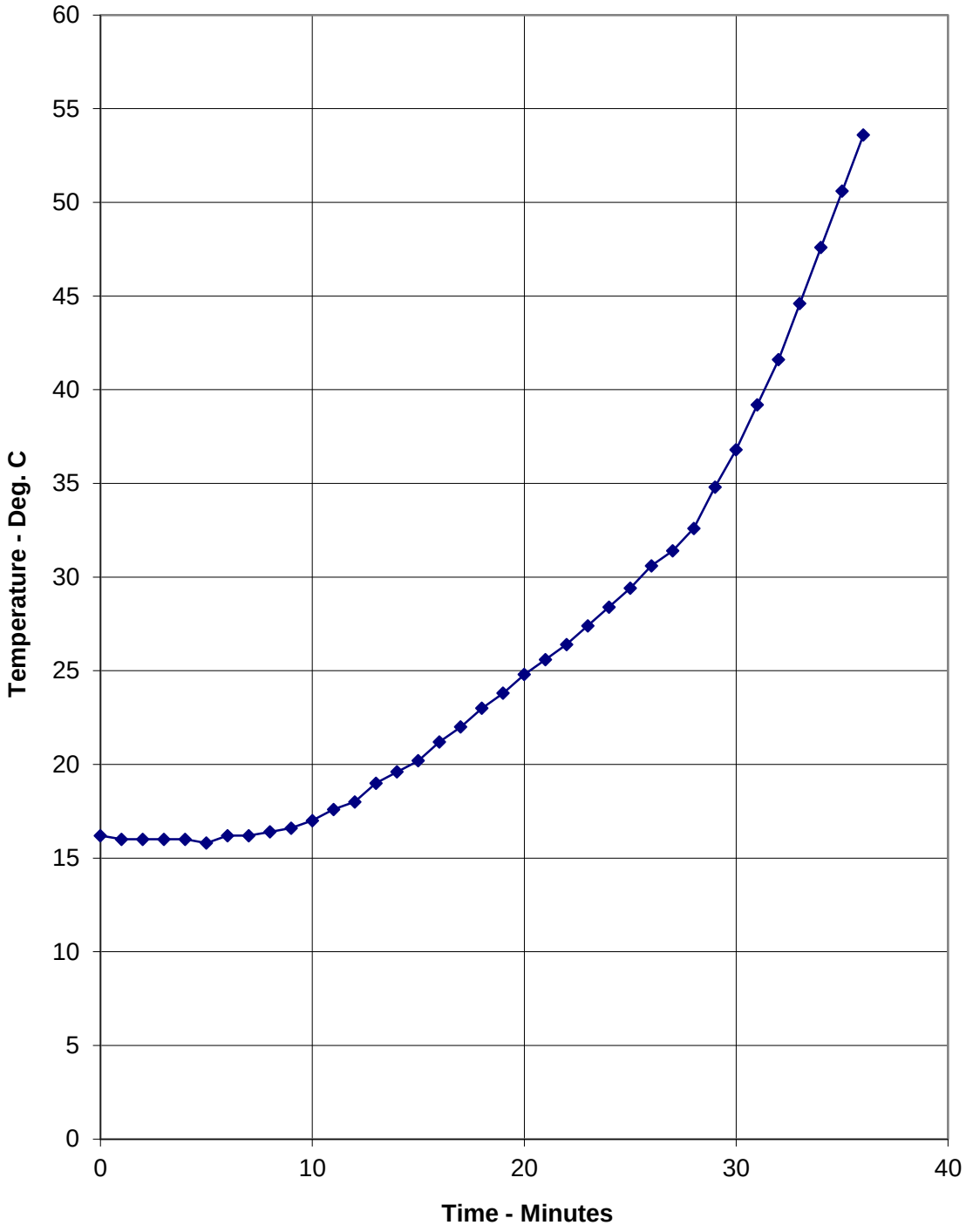

Graph showing the central vertical deflection of the floor assembly during the test

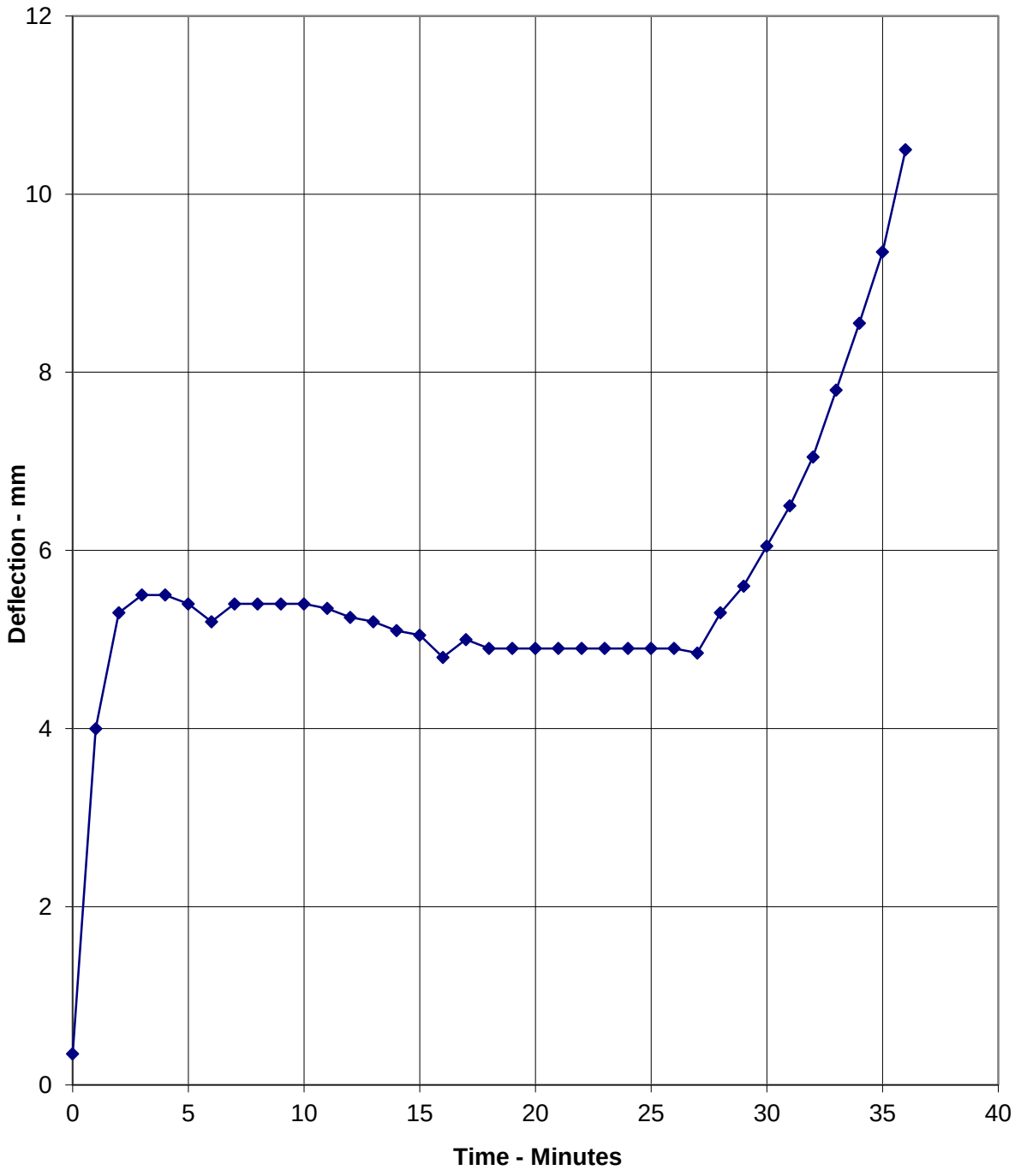

Load Calculations

1. **Physical Parameters of Timber Joists**

Measured Joist dimensions (d x b)	: 196 mm deep by 45 mm thick
Mean spacing (M)	: 600 mm
Effective span (L)	: 4200 mm
Timber grade of joists	: C16

2. **Parameters - BS 5268: Part 2: 2002**

Basic dry stress in bending	: 5.3 N/mm^2 (Table 7)
Modification factor for loading	: 1.1 (Table 2.9 (a))
Therefore working stress (F)	: 5.83 N/mm^2
Nominal density	: 370 kg/m^3

3. **Total Loading Required Per Joist**

Moment of Inertia (I)	: $bd^3/12$
	: $(45 \times 196^3)/12$
	: 28235760 mm^4
Distance from neutral axis to base of joist (y)	: 98 mm
Maximum bending stress	: FI/y
	: (5.83 x 282235760)/98
	: 1679739 N/mm^2
Also maximum bending stress	: $wL^2/8$
	: 1679739 N/mm^2
Where w	= Load per unit length
∴ w	= (1679739 x 8) / (4200 x 4200)
	= 0.76178 N/mm
	= 761 N/m
∴ Total loading (W)	: 3196.2 N
	: 325.8 kg

4. **Dead Weight**

Combined weight of overall specimen:

Actual density of joist	: 438 kg/m^3
Actual density of floor boarding	: 665 kg/m^3
Actual density of ceiling board - 12.5 mm thick	: 623 kg/m^3

Effective width of floor supported per joist (m)	: 0.6 m

weight of joist	: 16.2 kg
weight of floorboard	: 36.9 kg
weight of ceiling (two layers)	: 47.1 kg

Total dead weight per joist	: 100.2 kg

5. **Imposed Load**

Imposed load per joist required : total load per joist - dead weight per joist
: 325.8 – 100.2
: 225.6 kg

Assuming even distribution of loading

Maximum imposed load per metre square : (225.6 x 9.81) / (4.2 x 0.6)
: 878.23 N/m^2
: 0.87823 kN/m^2
: 90 kg/m^2

Calculation made by

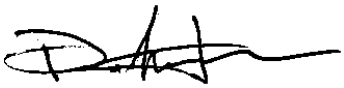

D. Fitzsimmons
Technical Officer
Fire Resistance Department

Checked by

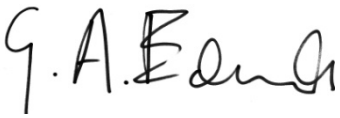

G. Edmonds
Senior Testing Officer
For and on behalf of
Exova Warringtonfire

Performance Criteria and Test Results

Loadbearing Capacity

The maximum allowable deflection and the maximum rate of deflection for the specimen, as specified by the Standard, are calculated as 210 mm and 8.9 mm per minute respectively. The allowable rate of deflection is not applicable until the deflection exceeds $^{1}/_{30}$ of the span (i.e. 140 mm). The test construction satisfied this requirement for the total test duration of 36 minutes.

Integrity

It is required that there is no collapse of the specimen floor assembly, no sustained flaming on the unexposed surface and no loss of impermeability. The test construction satisfied this requirement for the total test duration of 36 minutes.

Insulation

It is required that the mean temperature rise of the unexposed surface shall not be greater than 140˚C and that the maximum temperature rise shall not be greater than 180˚C. Insulation failure also occurs simultaneously with integrity failure. The test construction satisfied this requirement for the total test duration of 36 minutes.

Ongoing Implications

Limitations

The results relate only to the behaviour of the specimen of the element of construction under the particular conditions of test. They are not intended to be the sole criteria for assessing the potential fire performance of the element in use, nor do they reflect the actual behaviour in fires.

The test results relate only to the specimen light fittings tested. Appendix A of BS 476: Part 20: 1987 provides guidance information on the application of fire resistance tests and the interpretation of test data. Application of the result to assemblies of different dimensions or supported in other manners or incorporating different components should be the subject of a design appraisal.

This test report is additional to that issued as WF Test Report No. 371967 and dated 14th March 2017. The original test report remains valid and is not replaced by this additional test report. The products referred to in the original report and this additional test report has not been re-tested, this report does not involve technical change or technical review of the original test report.

Review

The specification and interpretation of fire test methods are the subject of ongoing development and refinement. Changes in associated legislation may also occur. For these reasons it is recommended that the relevance of test reports over five years old should be considered by the user. The laboratory that issued the report will be able to offer, on behalf of the legal owner, a review of the procedures adopted for a particular test to ensure that they are consistent with current practices, and if required may endorse the test report.

Conclusions

Evaluation against objective

A specimen of a loadbearing timber floor assembly, protected by a plasterboard ceiling incorporating twenty down lighter fittings has been subjected to a fire resistance test in accordance with BS 476: Part 21: 1987, Clause 7.

The evaluation of the assembly against the requirements of BS 476: Part 21: 1987, Clause 7 showed that it satisfied the requirements the periods stated below:

Test Results:

Loadbearing Capacity	36 minutes*
Integrity	36 minutes*
Insulation	36 minutes*

*The test was discontinued after a period of 36 minutes.

Exova Warringtonfire
Holmesfield Road
Warrington
WA1 2DS
United Kingdom

T : +44 (0) 1925 655 116
F : +44 (0) 1925 655 419
E : warrington@exova.com
W: www.exova.com

Testing. Advising. Assuring.

Title:

The Fire Resistance Performance of a Specimen of a Loadbearing Timber Floor Assembly Protected by a Plasterboard Ceiling Designed to Provide 90 minutes Fire Resistance, Incorporating Seventeen Downlight Light Fittings, Tested in Accordance with BS 476: Part 21: 1987, Clause 7

WF Report No:

370975B

Prepared for:

Integral LED
Unit 6, Iron Bridge Close, Iron Bridge Business Park, London, NW10 0UF, UK

Date:

19th May 2017

Notified Body No:

0833

0249

This test report is additional to that issued as WF Test report No. 370975 and dated 14th March 2017. The original test report remains valid and is not replaced by this additional test report.

Summary

Objective

To determine the fire resistance performance of a loadbearing timber floor assembly protected by a plasterboard ceiling designed to provide 90 minutes fire resistance, incorporating seventeen downlight light fittings, when tested in accordance with Clause 7 of BS 476: Part 21: 1987.

Sponsor

Integral LED
Unit 6, Iron Bridge Close, Iron Bridge Business Park, London, NW10 0UF,

Summary of Tested Assembly

The timber floor had overall nominal dimensions of 4200 mm long by 3000 mm wide and comprised softwood timber joists at 450 mm centres. The upper surface of the floor comprised nominally 22 mm thick tongue and grooved chipboard flooring.

The floor assembly was protected on its underside by a direct fixed ceiling, formed from two layers of 15 mm thick British Gypsum Fireline plasterboard, both layers were screw fixed to the underside of the floor joists.

The floor supported an evenly distributed load of 0.947 kN/m^2

The ceiling incorporated seventeen downlight lights.

Twelve of which were referenced A, B, C, H, I, J, K, L, M, N, O, P, Q and are subjected to a separate test report referenced 370975A.

Five of which were provided by the test sponsor and were referenced as follows:

Test Ref.	Model Ref.	Description
D	ILDLFR60FXXX	Round, trim-less screw fixed down light, 60 mm diameter cut-out,
E	ILDLFR70EXXX	Round, fixed, LED recessed down light with bezel, 70 mm diameter cut-out,
F	ILDLFR70DXXX	Round, fixed, LED recessed down light, 70 mm diameter cut-out, with bracket
G	ILDLFR70DXXX	Round, fixed, LED recessed down light, 70 mm diameter cut-out, without bracket
I	ILDLFR70DXXX (accessory of slim fire)	Round, fixed, LED recessed down light, 100 mm maximum diameter cut-out

Test Results:

Loadbearing Capacity	96 minutes*
Integrity	96 minutes*
Insulation	96 minutes*

*The test was discontinued after a period of 96 minutes

Date of Test 16th September 2016

This report may only be reproduced in full. Extracts or abridgements of reports shall not be published without permission of Exova Warringtonfire.

Signatories

Responsible Officer
W. Drazkiewicz*
Technical Officer

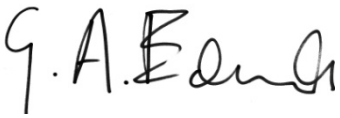

Approved
G. Edmonds*
Senior Technical Officer

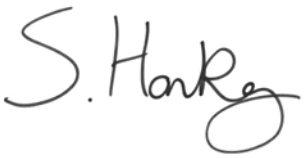

Head of Department
S. Hankey*
Business Unit Head

* For and on behalf of **Exova Warringtonfire.**

Report Issued

Date: 19th May 2017

This test report is additional to that issued as WF Test report No. 370975 and dated 14th March 2017. The original test report remains valid and is not replaced by this additional test report.

This copy has been produced from a .pdf format electronic file that has been provided by **Exova Warringtonfire** to the sponsors of the report and must only be reproduced in full. Extracts or abridgements of reports must not be published without permission of **Exova Warringtonfire**. The pdf copy supplied is the sole authentic version of this document. All pdf versions of this report bear authentic signatures of the responsible **Exova Warringtonfire** staff.

CONTENTS **PAGE NO.**

SUMMARY **2**
SIGNATORIES **4**
TEST PROCEDURE **6**
TEST SPECIMEN **7**
SCHEDULE OF COMPONENTS **15**
INSTRUMENTATION **18**
TEST OBSERVATIONS **19**
TEST PHOTOGRAPHS **21**
TEMPERATURE & DEFLECTION DATA **24**
LOAD CALCULATIONS **33**
PERFORMANCE CRITERIA AND TEST RESULTS **35**
ONGOING IMPLICATIONS **35**
CONCLUSIONS **36**

Test Procedure

Introduction

The specimen tested was of a loadbearing construction. The test was conducted in accordance with Clause 7 of BS 476: Part 21: 1987, 'Methods for determination of the fire resistance of loadbearing elements of construction'. This test report should be read in conjunction with that Standard and with BS 476: Part 20: 1987, 'Method for determination of the fire resistance of elements of construction (general principles)'.

The purpose of the test was to evaluate the performance of a timber floor construction protected by a ceiling of previously proven fire resistance, when incorporating down lighter fitting assemblies.

The specimen was judged on its ability to comply with the performance criteria for loadbearing capacity, integrity and insulation, as required by BS 476: Part 21: 1987, Clause 7.

Fire Test Study Group/EGOLF

Certain aspects of some fire test specifications are open to different interpretations. The Fire Test Study Group and EGOLF have identified a number of such areas and have agreed Resolutions which define common agreement of interpretations between fire test laboratories which are members of the Groups. Where such Resolutions are applicable to this test they have been followed.

Instruction To Test

The test was conducted on the 16th September 2016 at the request of the test sponsor.

Mr. A. Gooding a representative of the test sponsor witnessed the test.

Test Assembly Construction

A comprehensive description of the test construction is given in the Schedule of Components. The description is based on a detailed survey of the specimens and information supplied by the sponsors of the test.

Installation

Representatives of Exova Warringtonfire assembled the floor construction and installed the down lighters on the 15th September 2016.

Conditioning

The specimens' storage, construction, and test preparation took place in the test laboratory over a total combined time of 4 days. Throughout this period of time both the temperature and the humidity of the laboratory were measured and recorded as being within a range of from 16°C to 26°C and 53% to 87% respectively.

Test Specimens

Figure 1- General Elevation of Test Specimens

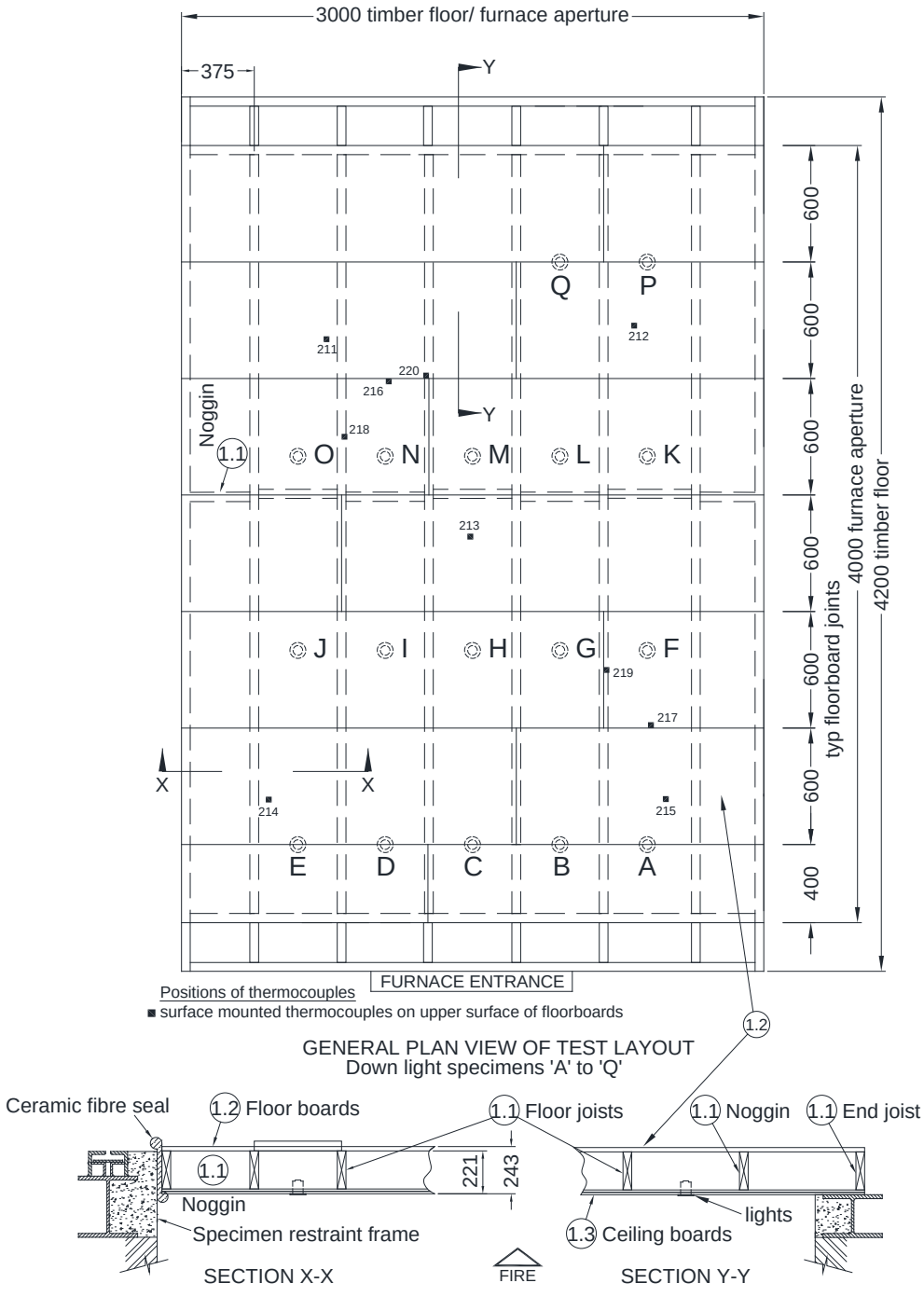

Do not scale. All dimensions are in mm

Figure 2 – Details of Downlighter Positions

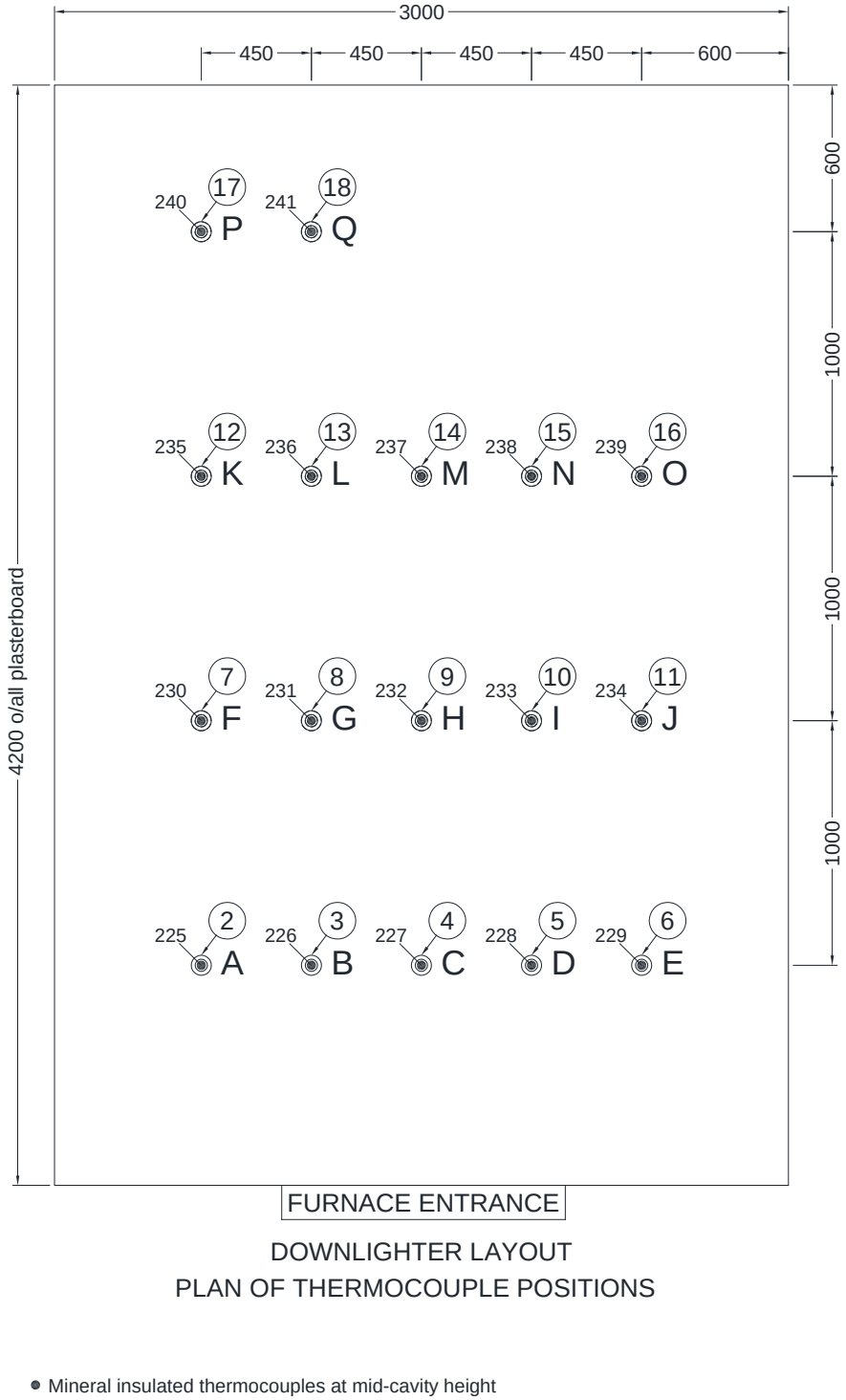

DOWNLIGHTER LAYOUT
PLAN OF THERMOCOUPLE POSITIONS

● Mineral insulated thermocouples at mid-cavity height

Do not scale. All dimensions are in mm

Figure 3 – Details of Downlighter Specimens A, B, C, H, J, K, L, M, N, O, P, Q

ITEMS REPORTED SEPARATELY IN THE TEST REPORT REFERENCED 370975A

Do not scale. All dimensions are in mm

Figure 4 – Details of Downlighter Specimen D

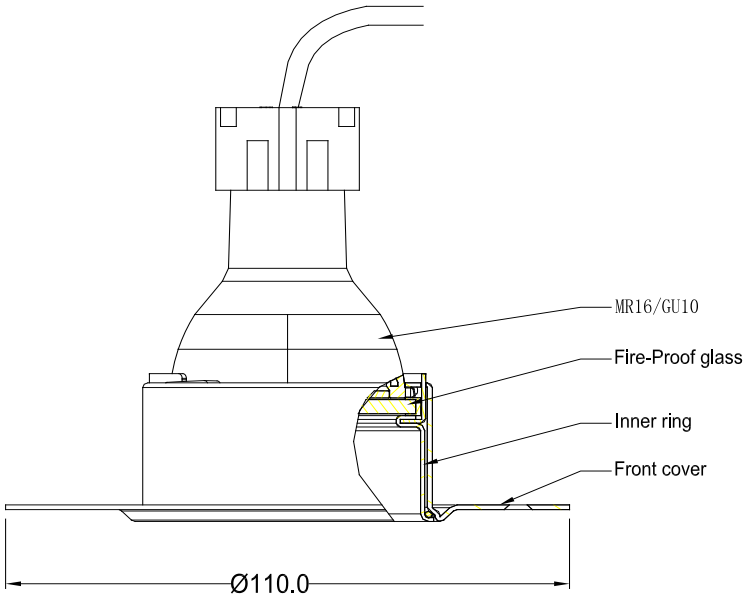

Fixed
ILDLFR60FXXX
Cut out:ϕ60

Do not scale. All dimensions are in mm

Figure 5 – Details of Downlighter Specimen E

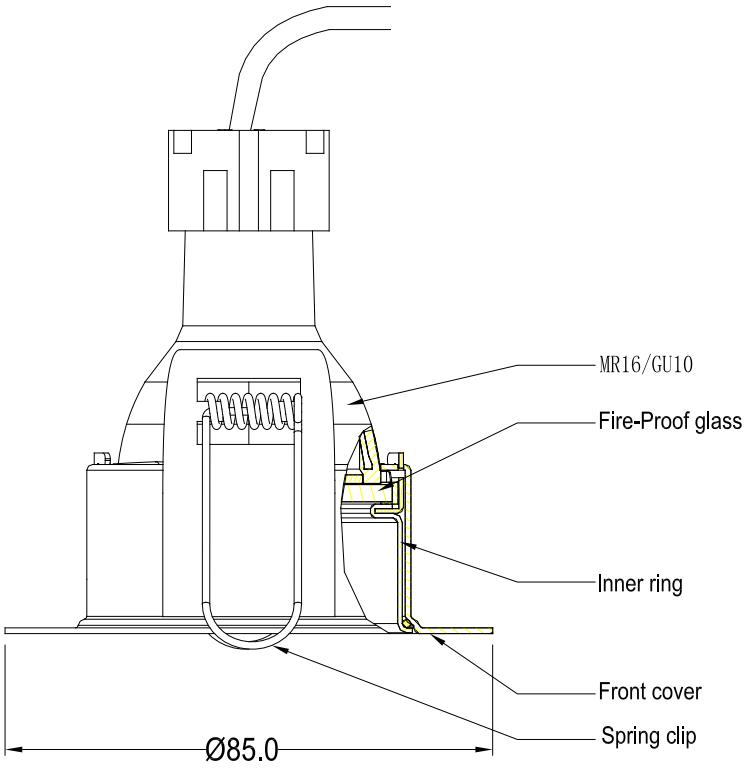

Fixed
ILDLFR70EXXX
Cut out:ϕ70

Do not scale. All dimensions are in mm

Figure 6 – Details of Downlighter Specimen F

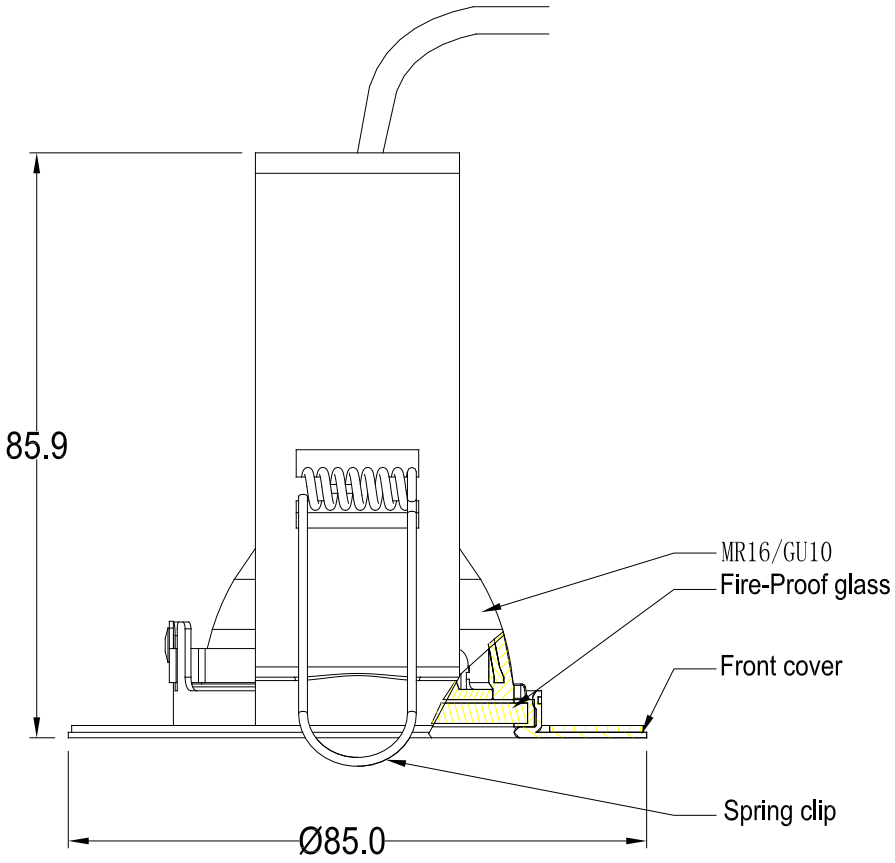

Fixed
ILDLFR70DXXX
with bracket
Cut out:ϕ70

Do not scale. All dimensions are in mm

Figure 7 – Details of Downlighter Specimen G

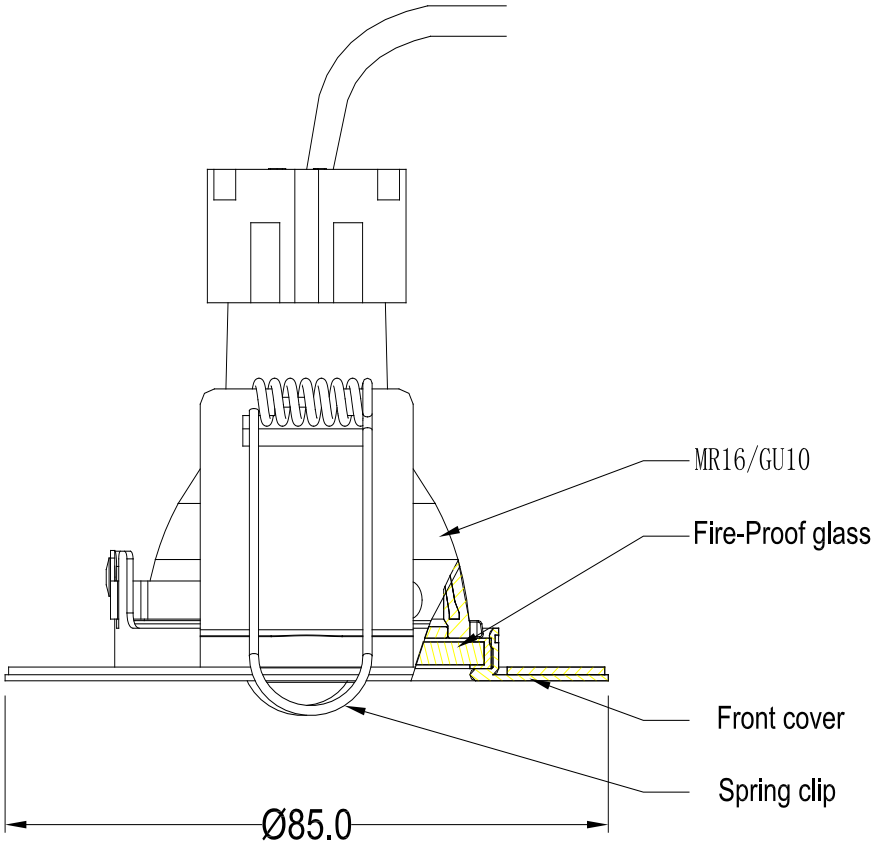

Fixed
ILDLFR70DXXX
Cut out:ϕ70

Do not scale. All dimensions are in mm

Figure 8 – Details of Downlighter Specimen I

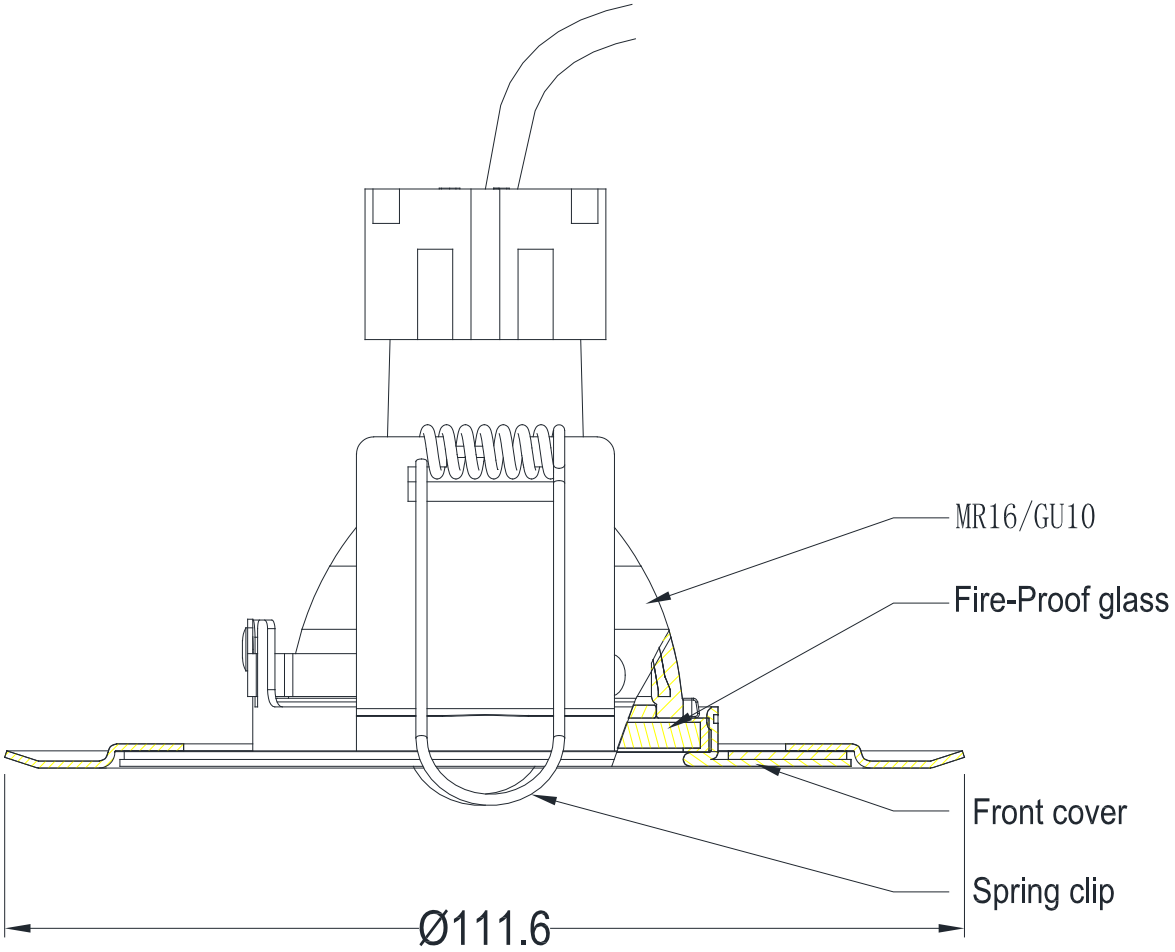

Fixed
ILDLFR70DXXX
accessory of Slim Fire
Cut out:ϕ100mm

Do not scale. All dimensions are in mm

Schedule of Components

(Refer to Figures 1 to 19)
(All values are nominal unless stated otherwise)
(All other details are as stated by the sponsors)

Item		Description
1. Timber Floor		
1.1 Floor Joists		
Material	:	British Home-grown, rough sawn softwood, kiln dried
Grade	:	C24, to BS EN 519
Density	:	508.9 kg/m^3
Size	:	45 mm x 194 mm
Joist centres	:	450 mm
1.2 Floor Boards		
Material	:	Flooring grade tongue and groove chipboards
Reference	:	FSC E1 P5
Density	:	467.4 kg/m^3
Thickness	:	22 mm
Size	:	600 mm wide
Fixing	:	Fixed in a single layer with 6 mm diameter x 60 mm long countersunk steel screws to floor joists at 300 mm centres
1.3 Ceiling Boards		
Manufacturer	:	British Gypsum
Type / reference	:	Gyproc Fireline Wallboard
Density	:	883.7 kg/m^3
Thickness	:	30 mm, 2 layers of 15 mm thick, nominal
Fixing		
i. method	:	The boards were screw fixed to the soffit of the joists with all joints staggered
ii. fixings	:	Drywall self-drill and tapping screws 38 mm and 45 mm long for the 1st and 2nd board layers respectively
iii. frequency	:	150 mm centers along joints and 150 mm to the perimeter of the ceiling
2. Specimen A	:	Specimen reported separately
3. Specimen B	:	Specimen reported separately
4. Specimen C	:	Specimen reported separately
5. Specimen D		
Manufacturer	:	Integral LED
Type	:	Round, fixed, LED recessed downlight
Reference	:	ILDLFR60FXXX
Materials		
i. inner ring	:	Steel
ii. diffuser	:	Pyrex glass
iii. front cover	:	Steel
Overall dimensions and construction	:	See Figure 6 for details
Cut out size	:	60 mm
Driver	:	None
Lamp	:	GU10/MR16

Item		Description
6. Specimen E		
Manufacturer	:	Integral LED
Type	:	Round, fixed, LED recessed downlight
Reference	:	ILDLFR70EXXX
Materials		
i. front cover	:	Steel
ii. diffuser	:	Pyrex glass
iii. inner ring		Steel
Overall dimensions and construction	:	See Figure 7 for details
Cut out size	:	70 mm
Driver	:	None
Lamp	:	GU10/MR16
7. Specimen F		
Manufacturer	:	Integral LED
Type	:	Round, fixed, LED recessed downlight
Reference	:	ILDLFR70DXXX with bracket
Materials		
i. front cover	:	Steel
ii. diffuser	:	Pyrex glass
iii. spring		Stainless steel
iv. bracket	:	Steel
Overall dimensions and construction	:	See Figure 8 for details
Cut out size	:	70mm
Driver	:	None
Lamp	:	GU10/MR16
8. Specimen G		
Manufacturer	:	Integral LED
Type	:	Round, fixed, LED recessed downlight
Reference	:	ILDLFR70DXXX without bracket
Materials		
i. front cover	:	Steel
ii. diffuser	:	Pyrex glass
iii. spring	:	Stainless steel
Overall dimensions and construction	:	See Figure 9 for details
Cut out size	:	70 mm
Driver	:	None
Lamp	:	GU10/MR16
9. Specimen H	:	Specimen reported separately
10. Specimen I		
Manufacturer	:	Integral LED
Type	:	Round, fixed, LED recessed downlight
Reference	:	ILDLFR70DXXX (accessory of slim fire)
Materials		
i. front cover	:	Steel
ii. diffuser	:	Pyrex glass
iii. front cover insert and spring clip plate	:	Powder coated mild steel Aluminium
iv. spring clip	:	Stainless steel
Cut out size	:	70-100 mm
Driver	:	None
Lamp	:	GU10/MR16

Item		Description
12. Specimen K	:	Specimen reported separately
13. Specimen L	:	Specimen reported separately
14. Specimen M	:	Specimen reported separately
15. Specimen N	:	Specimen reported separately
16. Specimen O	:	Specimen reported separately
17. Specimen P	:	Specimen reported separately
18. Specimen Q	:	Specimen reported separately

Instrumentation

General

The instrumentation was provided in accordance with the requirements of the Standard.

Furnace

The furnace was controlled so that its mean temperature complied with the requirements of BS 476: Part 20: 1987, Clause 3.1. using eight mineral insulated thermocouples distributed over a plane 100 mm from the underside of the ceiling.

Thermocouple Allocation

Thermocouples were provided to monitor the unexposed surface of the floor assembly and the output of all instrumentation was recorded at no less than one minute intervals as follows:

The locations and reference numbers of the various unexposed surface and internal thermocouples are shown in Figure 1.

Roving Thermocouple

A roving thermocouple was available to measure temperatures on the unexposed surface of the specimen at any position which might appear to be hotter than the temperatures indicated by the fixed thermocouples.

Integrity criteria

Cotton pads and gap gauges were available to evaluate the impermeability of the test construction to hot gases.

Furnace Pressure

After the first five minutes of testing and for the remainder of the test, the furnace atmospheric pressure was controlled so that it complied with the requirements of BS 476: Part 20: 1987, Clause 3.2.2. The calculated pressure differential relative to the laboratory atmosphere at a position 100 mm below the underside of the assembly was 20 (+0, -2) Pa.

Test Observations

Time		All observations are from the unexposed face unless noted otherwise.
mins	secs	The ambient air temperature in the vicinity of the test construction was 18ºC at the start of the test with a maximum variation of +2ºC during the test.
00	00	**The test commences.**
05	00	No visible significant change.
09	01	Small amount of smoke is released from underneath the floorboard at furnace entry end.
10	00	**Viewed from exposed face.** All specimens have discoloured black. Plasterboard to exposed face have buckled and deflected towards the heating conditions. Temperature in the cavity exceeds 100°c at approximately the centre of the floor/ceiling assembly.
13	58	**Viewed from exposed face.** Tape on the joints on the plasterboard is detaching from the exposed face surface.
15	00	No visible significant changes to the unexposed face.
21	11	**Viewed from exposed face.** Downlighters M and P have detached from the ceiling/floor assembly.
30	00	No visible significant changes to both faces.
45	00	No visible significant changes to both faces.
60	00	No visible significant changes to both faces.
75	00	No visible significant changes to both faces.
84	05	Joints in the first layer of plasterboard to exposed face have widened.
90	00	Cracking noises can be heard. Smoke releases through the ends of the specimen assembly increase in volume. Cavity temperature is in excess of 300°C. Deflection ratio increases. Specimen continues to satisfy the loadbearing capacity, integrity and insulation, allowing the test to continue.
91	00	**Viewed from exposed face.** Plasterboard on the exposed face begins to detach from the joists.
94	13	**Viewed from exposed face.** Large areas of plasterboard have detached from the floor assembly.

Time		
mins	secs	
		All observations are from the unexposed face unless noted otherwise.
		The ambient air temperature in the vicinity of the test construction was 18ºC at the start of the test with a maximum variation of +2ºC during the test.
95	00	**Viewed from exposed face.**
		Approximately 60% of the first layer of plasterboards to exposed face have detached from the assembly.
96	00	**Test discontinued** for healthy and safety reasons as the deflection rapidly increases and a risk of a collapse of the assembly occurs.

Test Photographs

The exposed face of the assembly prior to testing

The unexposed face of the assembly prior to the start of the test

The unexposed face of the assembly after 60 minutes of testing

The exposed face of the assembly after a test duration of 60 minutes

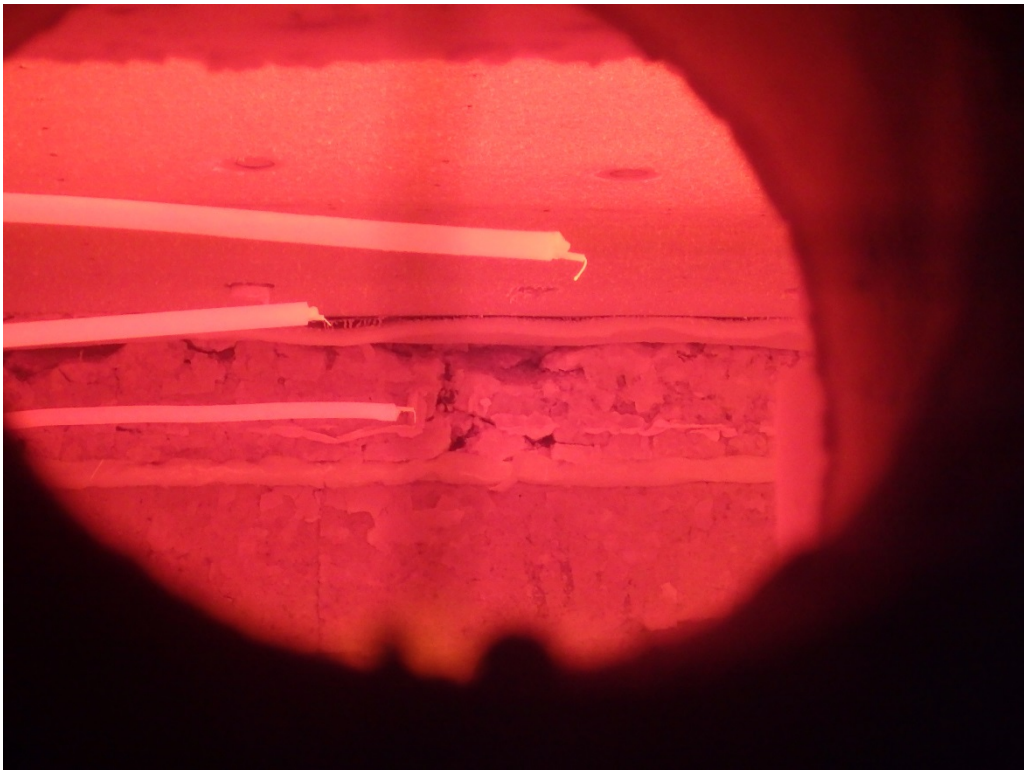

The unexposed face of the assembly after 90 minutes of testing

Temperature & Deflection Data

Mean furnace temperature, together with the temperature/time relationship specified in the Standard

Time Mins	Specified Furnace Temperature Deg. C	Actual Furnace Temperature Deg. C
0	20	26
3	502	465
6	603	639
9	663	654
12	706	734
15	739	733
18	766	780
21	789	787
24	809	804
27	826	832
30	842	843
33	856	855
36	869	870
39	881	880
42	892	890
45	902	904
48	912	912
51	921	920
54	930	928
57	938	941
60	945	952
63	953	955
66	960	960
69	966	968
72	973	975
75	979	979
78	985	981
81	990	990
84	996	998
87	1001	1003
90	1006	1010
93	1011	1012
96	1016	998

Individual and mean temperatures recorded on the unexposed surface of the floor assembly

Time Mins	T/C Number 211 Deg. C	T/C Number 212 Deg. C	T/C Number 213 Deg. C	T/C Number 214 Deg. C	T/C Number 215 Deg. C	Mean Temp Deg. C
0	22	22	22	22	19	21
3	22	22	22	22	19	21
6	22	22	22	22	19	21
9	22	22	22	22	19	21
12	22	22	22	22	19	21
15	22	22	22	22	20	22
18	23	24	22	23	21	23
21	25	25	23	25	23	24
24	27	27	24	28	25	26
27	29	30	25	30	28	28
30	32	32	27	33	31	31
33	34	34	29	36	34	33
36	36	36	31	38	36	35
39	38	38	33	40	39	38
42	40	40	34	42	41	39
45	42	42	36	44	43	41
48	43	44	38	46	44	43
51	45	45	40	47	46	45
54	46	47	41	49	47	46
57	47	49	43	50	48	47
60	49	50	44	51	49	49
63	50	51	45	52	50	50
66	51	52	46	53	51	51
69	52	53	47	54	52	52
72	53	54	48	54	52	52
75	55	56	49	55	53	54
78	58	59	50	57	55	56
81	62	63	51	59	57	58
84	66	67	52	62	59	61
87	70	70	54	64	61	64
90	73	73	56	67	63	66
93	75	76	58	69	65	69
96	77	77	61	72	67	71

Individual temperatures recorded adjacent to joints in the flooring

Time Mins	T/C Number 216 Deg. C	T/C Number 217 Deg. C	T/C Number 218 Deg. C	T/C Number 219 Deg. C	T/C Number 220 Deg. C
0	20	20	20	20	21
3	20	20	20	20	21
6	20	20	20	20	21
9	20	20	20	20	21
12	20	20	20	20	21
15	21	20	20	20	21
18	22	21	21	20	22
21	23	23	21	21	23
24	25	25	22	22	25
27	27	28	24	24	26
30	30	31	25	26	29
33	31	34	26	28	31
36	34	37	28	31	34
39	36	41	29	33	37
42	38	43	31	35	40
45	40	46	32	37	43
48	42	49	34	39	47
51	44	50	35	41	49
54	46	52	37	43	52
57	48	53	38	46	54
60	49	54	40	47	55
63	51	55	41	49	56
66	52	56	42	51	58
69	54	56	43	52	59
72	57	56	43	53	61
75	60	57	44	54	63
78	63	59	46	55	66
81	66	61	47	57	69
84	69	63	49	59	71
87	71	65	51	63	74
90	73	66	54	66	76
93	74	67	56	70	79
96	75	69	59	75	81

Individual temperatures recorded adjacent to the light fittings at mid height of the cavity

Time Mins	T/C Number 225 Deg. C	T/C Number 226 Deg. C	T/C Number 227 Deg. C	T/C Number 228 Deg. C	T/C Number 229 Deg. C	T/C Number 230 Deg. C	T/C Number 231 Deg. C	T/C Number 232 Deg. C
0	25	24	24	25	23	23	24	24
3	25	24	25	25	23	27	24	25
6	26	27	29	31	26	46	32	30
9	31	36	43	45	38	71	50	43
12	42	49	63	57	54	83	74	61
15	58	68	81	69	85	96	87	81
18	70	99	108	79	156	98	92	88
21	98	112	109	85	154	110	107	97
24	105	130	115	86	184	115	120	101
27	91	93	115	87	193	113	108	102
30	94	103	147	88	191	120	137	107
33	100	95	146	92	164	130	136	110
36	102	99	140	96	182	135	146	112
39	108	99	133	102	152	121	144	116
42	103	102	132	103	191	121	123	118
45	119	107	130	114	215	122	138	122
48	118	106	138	127	199	120	131	121
51	111	107	137	112	191	122	115	127
54	103	105	140	124	159	124	116	129
57	103	105	139	136	134	129	119	136
60	109	109	139	132	133	138	124	136
63	108	111	122	120	132	163	139	154
66	117	121	133	127	145	194	162	176
69	129	133	150	139	159	215	180	199
72	143	147	162	154	178	225	194	207
75	155	158	174	165	191	239	207	222
78	165	169	183	175	205	249	217	230
81	175	177	194	186	216	256	232	246
84	183	187	203	197	227	272	243	257
87	194	196	212	205	238	282	254	267
90	203	204	220	216	251	294	265	279
93	211	212	251	225	261	318	276	329
96	219	221	281	240	276	571	286	642

Individual temperatures recorded adjacent to the light fittings at mid height of the cavity

Time	T/C Number	T/C Number	T/C Number	T/C Number	T/C Number	T/C Number	T/C Number	T/C Number	T/C Number
Mins	233	234	235	236	237	238	239	240	241
	Deg. C	Deg. C	Deg. C	Deg. C	Deg. C	Deg. C	Deg. C	Deg. C	Deg. C
0	25	24	24	27	27	28	28	28	28
3	27	24	25	28	28	30	29	28	32
6	28	32	30	47	47	46	38	62	51
9	42	45	43	72	97	67	47	92	93
12	61	72	66	92	111	104	64	104	123
15	100	88	83	95	135	126	78	125	150
18	113	91	84	107	84	103	88	104	153
21	123	100	101	101	145	95	108	114	141
24	136	108	101	99	102	95	114	129	143
27	142	125	100	101	109	101	118	178	179
30	153	124	136	104	101	112	111	200	188
33	154	127	124	105	109	113	113	209	203
36	135	125	129	107	235	139	115	213	204
39	135	118	129	107	201	179	114	236	201
42	133	135	132	109	220	177	120	241	189
45	124	131	127	110	218	173	116	282	144
48	134	115	124	110	217	183	118	255	129
51	118	111	122	114	172	164	122	238	132
54	117	111	123	114	207	163	119	227	138
57	117	113	124	119	227	168	116	219	155
60	123	119	132	132	234	195	122	181	161
63	135	133	152	147	220	218	135	157	170
66	153	146	170	169	232	237	152	160	163
69	175	168	201	183	248	255	170	171	180
72	189	182	215	199	264	272	188	182	192
75	203	198	231	207	264	273	200	195	203
78	216	213	246	221	276	285	214	205	211
81	227	225	260	227	300	306	232	215	219
84	241	241	265	242	299	318	242	227	228
87	252	251	287	252	314	314	261	235	236
90	266	266	295	269	338	337	280	243	249
93	273	278	302	296	337	322	288	274	260
96	286	481	341	325	810	771	714	308	299

Deflection and rate of deflection of the floor assembly during the test

Time Mins	Central Vertical Deflection mm	Rate of Deflection mm/min
0	0	0
3	2	0
6	3	0
9	3	0
12	3	0
15	3	0
18	4	0
21	4	0
24	4	0
27	5	0
30	5	0
33	6	0
36	7	0
39	7	0
42	8	0
45	9	0
48	9	0
51	10	1
54	10	0
57	10	0
60	11	0
63	11	0
66	12	1
69	12	0
72	13	0
75	14	0
78	15	0
81	18	1
84	20	1
87	22	1
90	25	1
93	28	1
96	32	2

Graph showing specified and actual furnace temperatures

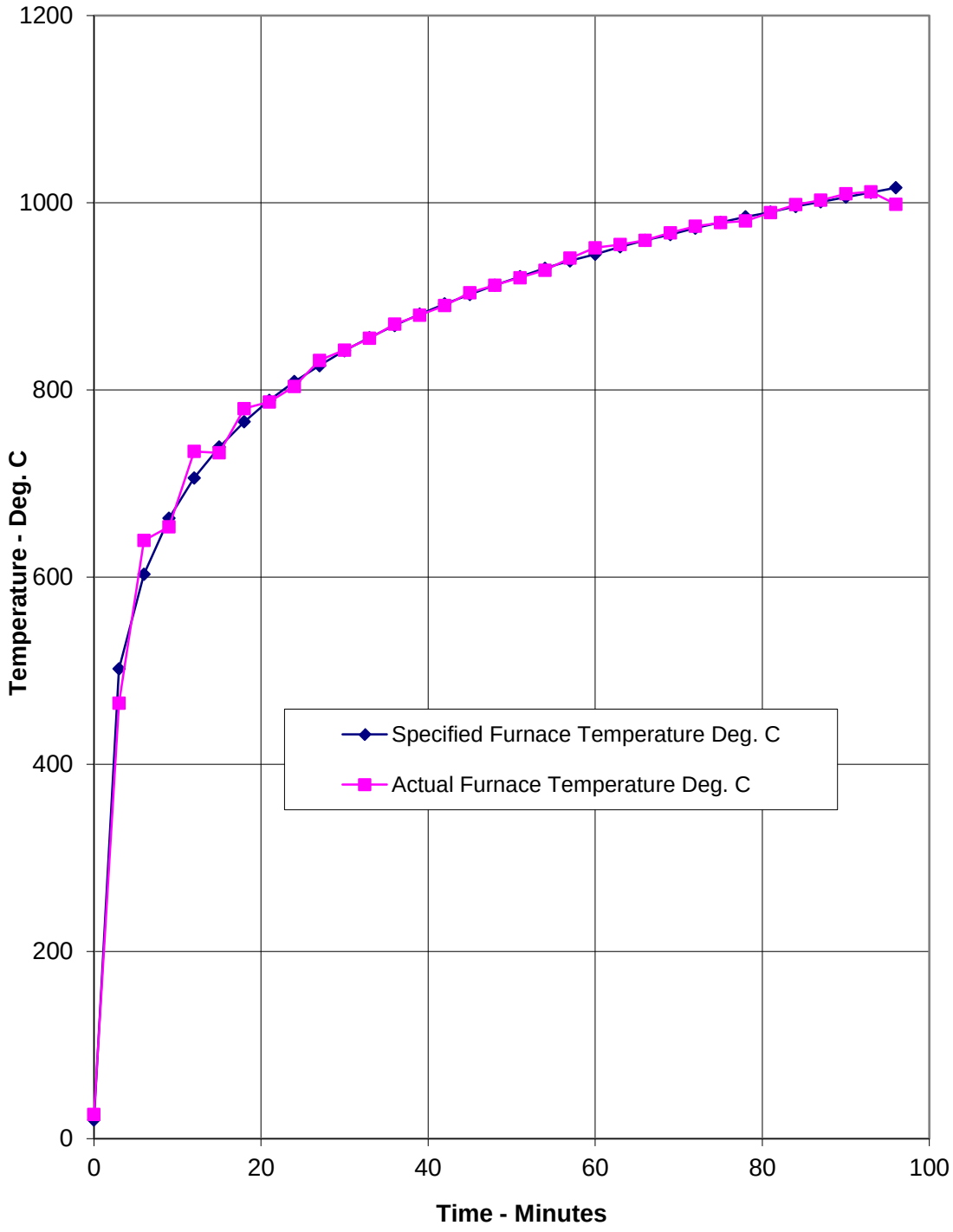

Graph showing mean unexposed surface temperature of the floor assembly

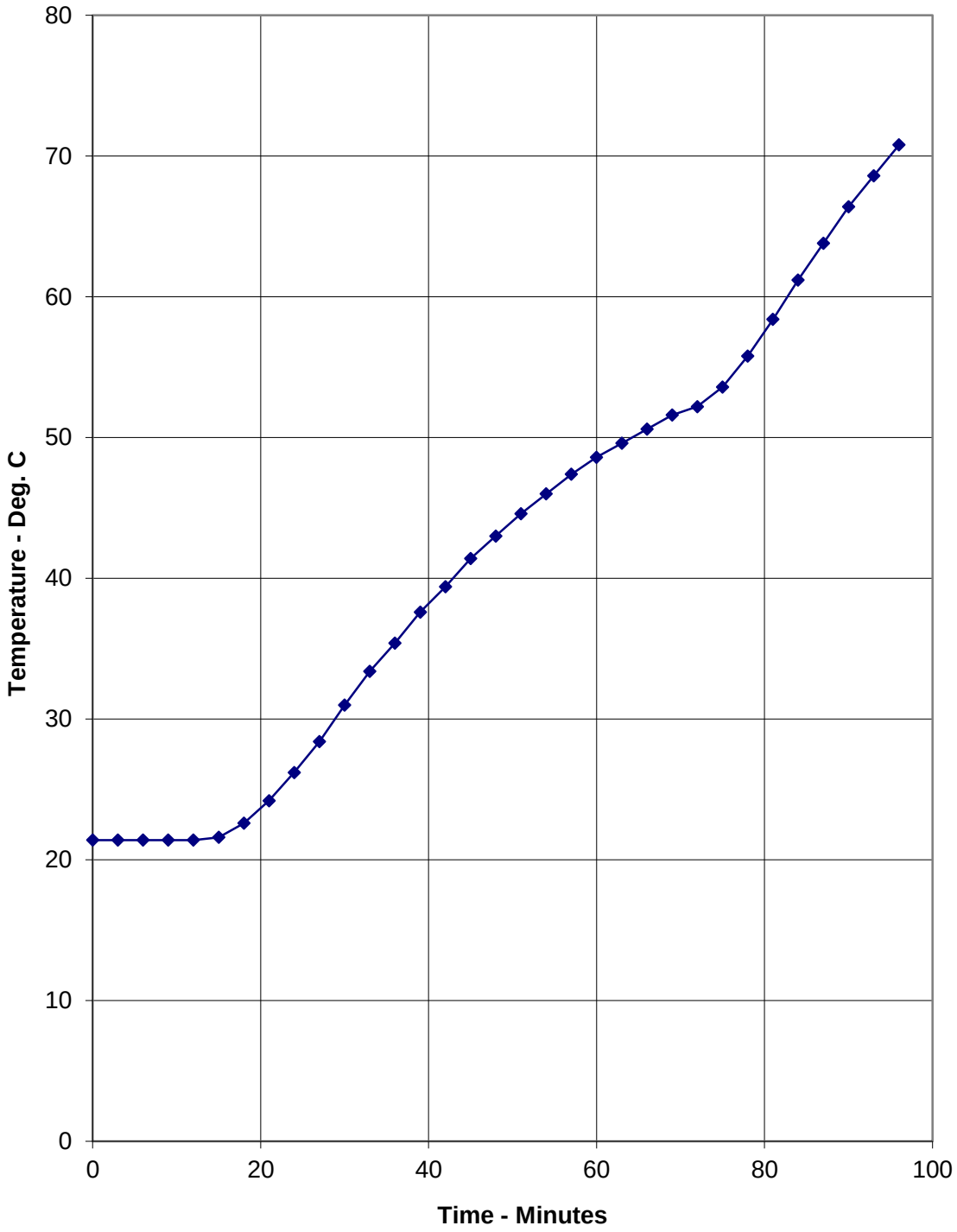

Graph showing the central vertical deflection of the floor assembly during the test

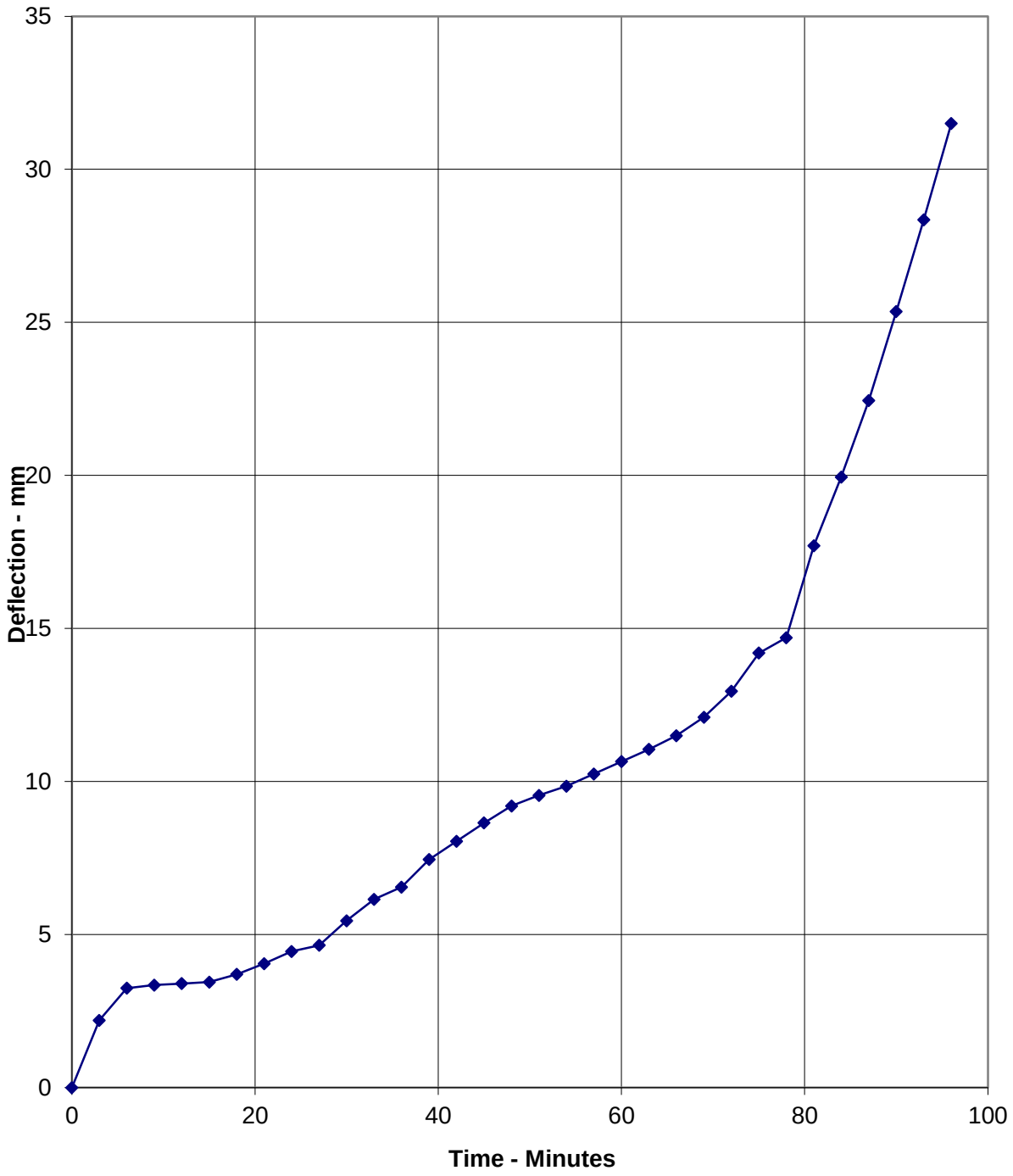

Load Calculations

1. **Physical Parameters of Timber Joists**

Measured Joist dimensions (d x b)	: 194 mm deep by 45 mm thick
Mean spacing (M)	: 450 mm
Effective span (L)	: 4200 mm
Timber grade of joists	: C24

2. **Parameters - BS 5268 – Part 2:2002**

Basic dry stress in bending	: 7.5 N/mm^2 (Table 8)
Modification factor for loading	: 1.1 (Table 2.9 (a))
Therefore working stress (F)	: 8.25 N/mm^2
Nominal density	: 535 kg/m^3

3. **Total Loading Required Per Joist**

Moment of Inertia (I)	: $bd^3/12$
	: $(45 \times 194^3)/12$
	: 27380190 mm^4
Distance from neutral axis to base of joist (y)	: 97 mm
Maximum bending stress	: FI/y
	: (8.25 x 27380190)/97
	: 2328727.5 N/mm^2
Also maximum bending stress	: $wL^2/8$
	: 2328727.5 N/mm^2
Where w	= Load per unit length
∴ w	= (2328727.5 x 8) / (4200 x 4200)
	= 1.0561 N/mm
	= 1056.1 N/m
∴ Total loading (W)	: 4435.67 N
	: 452.2 kg
∴ Total loading with 0.6 ratio (Wt)	: 0.6x452.2 kg
	: 271.3 kg

4. **Dead Weight**

Combined weight of overall specimen:

Actual density of joist	: 508.9 kg/m^3
Actual density of floor boarding	: 467.4 kg/m^3
Actual density of ceiling board	: 883.7 kg/m^3
Effective width of floor supported per joist (m)	: 0.45 m
Weight of joist	: 18.65 kg
Weight of floorboard	: 19.7 kg
Weight of ceiling	: 50.1 kg
Total dead weight per joist	: 88.4 kg

5. **Imposed Load**

Imposed load per joist required : total load per joist - dead weight per joist
: 271.3 – 88.4
= 182.9 kg

Assuming even distribution of loading

Maximum imposed load per metre square : (182.9 x 9.81) / (4.2 x 0.45)
: 947,262 N/m^2
: 0.947 kN/m^2
: 96.6 kg/m^2

Calculation made by

W. Drazkiewicz
Technical Officer
Fire Resistance Department

Checked by

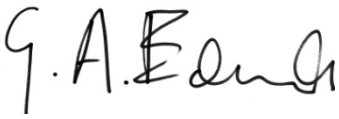

G. Edmonds
Senior Technical Officer
For and on behalf of
Exova Warringtonfire

Performance Criteria and Test Results

Loadbearing Capacity

The maximum allowable deflection and the maximum rate of deflection for the specimen, as specified by the Standard, are calculated as 210 mm and 8.9 mm per minute respectively. The allowable rate of deflection is not applicable until the deflection exceeds $^{1}/_{30}$ of the span (i.e. 140 mm). The test construction satisfied this requirement for the total test duration of 96 minutes.

Integrity

It is required that there is no collapse of the specimen floor assembly, no sustained flaming on the unexposed surface and no loss of impermeability. The test construction satisfied this requirement for the total test duration of 96 minutes.

Insulation

It is required that the mean temperature rise of the unexposed surface shall not be greater than 140˚C and that the maximum temperature rise shall not be greater than 180˚C. Insulation failure also occurs simultaneously with integrity failure. The test construction satisfied this requirement for the total test duration of 96 minutes.

Ongoing Implications

Limitations

The results relate only to the behaviour of the specimen of the element of construction under the particular conditions of test. They are not intended to be the sole criteria for assessing the potential fire performance of the element in use, nor do they reflect the actual behaviour in fires.

The test results relate only to the specimen light fittings tested. Appendix A of BS 476: Part 20: 1987 provides guidance information on the application of fire resistance tests and the interpretation of test data. Application of the result to assemblies of different dimensions or supported in other manners or incorporating different components should be the subject of a design appraisal.

This test report is additional to that issued as WF Test Report No. 370975 and dated 14th March 2017. The original test report remains valid and is not replaced by this additional test report. The products referred to in the original report and this additional test report has not been re-tested, this report does not involve technical change or technical review of the original test report.

Review

The specification and interpretation of fire test methods are the subject of ongoing development and refinement. Changes in associated legislation may also occur. For these reasons it is recommended that the relevance of test reports over five years old should be considered by the user. The laboratory that issued the report will be able to offer, on behalf of the legal owner, a review of the procedures adopted for a particular test to ensure that they are consistent with current practices, and if required may endorse the test report.

Conclusions

Evaluation against objective

A specimen of a loadbearing timber floor assembly, protected by a plasterboard ceiling incorporating seventeen down lighter fittings has been subjected to a fire resistance test in accordance with BS 476: Part 21: 1987, Clause 7.

The evaluation of the assembly against the requirements of BS 476: Part 21: 1987, Clause 7 showed that it satisfied the requirements the periods stated below:

Test Results:

Loadbearing Capacity	96 minutes*
Integrity	96 minutes*
Insulation	96 minutes*

*The test was discontinued after a period of 96 minutes.